KENR9123-01
August 2011

Specifications

1204E-E44TA and 1204E-E44TTA Industrial Engines

MK (Engine)
ML (Engine)

Important Safety Information

Most accidents that involve product operation, maintenance and repair are caused by failure to observe basic safety rules or precautions. An accident can often be avoided by recognizing potentially hazardous situations before an accident occurs. A person must be alert to potential hazards. This person should also have the necessary training, skills and tools to perform these functions properly.

Improper operation, lubrication, maintenance or repair of this product can be dangerous and could result in injury or death.

Do not operate or perform any lubrication, maintenance or repair on this product, until you have read and understood the operation, lubrication, maintenance and repair information.

Safety precautions and warnings are provided in this manual and on the product. If these hazard warnings are not heeded, bodily injury or death could occur to you or to other persons.

The hazards are identified by the “Safety Alert Symbol” and followed by a “Signal Word” such as “DANGER”, “WARNING” or “CAUTION”. The Safety Alert “WARNING” label is shown below.

⚠ WARNING

The meaning of this safety alert symbol is as follows:

Attention! Become Alert! Your Safety is Involved.

The message that appears under the warning explains the hazard and can be either written or pictorially presented.

Operations that may cause product damage are identified by “NOTICE” labels on the product and in this publication.

Perkins cannot anticipate every possible circumstance that might involve a potential hazard. The warnings in this publication and on the product are, therefore, not all inclusive. If a tool, procedure, work method or operating technique that is not specifically recommended by Perkins is used, you must satisfy yourself that it is safe for you and for others. You should also ensure that the product will not be damaged or be made unsafe by the operation, lubrication, maintenance or repair procedures that you choose.

The information, specifications, and illustrations in this publication are on the basis of information that was available at the time that the publication was written. The specifications, torques, pressures, measurements, adjustments, illustrations, and other items can change at any time. These changes can affect the service that is given to the product. Obtain the complete and most current information before you start any job. Perkins dealers or Perkins distributors have the most current information available.

⚠ WARNING

When replacement parts are required for this product Perkins recommends using Perkins replacement parts.

Failure to heed this warning can lead to premature failures, product damage, personal injury or death.

Table of Contents

Specifications Section

Engine Design 4
Fuel Injection Lines 4
Fuel Injection Pump 5
Fuel Injectors 6
Fuel Transfer Pump 6
Fuel Filter Base (Single Secondary Fuel Filter Base) 7
Fuel Filter Base (Twin Secondary Fuel Filter Base) 7
Fuel Filter Base (Primary Fuel Filter Base) 8
Fuel Manifold (Rail) 8
Lifter Group 9
Rocker Shaft 9
Valve Mechanism Cover 10
Cylinder Head Valves 11
Cylinder Head 12
Turbocharger (Series Turbochargers) 13
Turbocharger (Single Turbocharger) 15
Exhaust Gas Valve (NRS) 17
Exhaust Sensor and Lines (NRS) 18
Exhaust Cooler (NRS) 19
Exhaust Manifold 21
Flexible Exhaust Pipe 22
Diesel Particulate Filter 22
Camshaft 23
Camshaft Bearings 24
Engine Oil Filter Base 24
Engine Oil Cooler 25
Engine Oil Pump 25
Engine Oil Pressure 26
Engine Oil Pan 26
Crankcase Breather 27
Water Temperature Regulator and Housing 28
Water Pump 28
Cylinder Block 29
Crankshaft 29
Crankshaft Seals 31
Connecting Rod Bearing Journal 31
Main Bearing Journal 32
Connecting Rod 32
Piston and Rings 34
Piston Cooling Jet 35
Balancer Group 35
Accessory Drive (SAE “B”) 36
Accessory Drive 36
Front Housing and Covers 37
Gear Group (Front) 37
Flywheel 39
Flywheel Housing 39
Crankshaft Pulley 40
Belt Tensioner 40
Refrigerant Compressor 41
Fan Drive 41
Engine Lifting Bracket 41
Alternator 42
Starter Motor 43
Coolant Temperature Sensor 44
Engine Oil Pressure Sensor 44
Boost Pressure Sensor 45
Atmospheric Pressure Sensor 45
Inlet Manifold Temperature Sensor 46
Temperature Sensor (DPF Inlet) 46
Pressure Sensor (NOx Reduction System) 46
Temperature Sensor (NOx Reduction System) 47
Speed/Timing Sensor 47
Electronic Control Module 48
Glow Plugs 48
Air Compressor (Twin Cylinder Compressor) 49
Air Compressor (Single Cylinder) 50

Index Section

Index 51

Specifications Section

i03907589

Engine Design

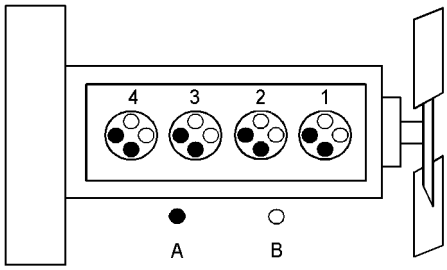

g01335181

Illustration 1

Cylinder and valve location

(A) Exhaust valve
(B) Inlet valve

Bore ..... 105 mm (4.133 inch)

Stroke ..... 127 mm (5.000 inch)

Displacement ..... 4.4 L (269 in^3)

Cylinder arrangement ..... In-line

Type of combustion ..... Direct injection

Compression ratio

Turbocharged engines and turbocharged charge cooled engines 16.2:1

Number of cylinders 4

Valves per cylinder 4

Firing order 1, 3, 4, 2

When the crankshaft is viewed from the front of the engine, the crankshaft rotates in the following direction: ..... Clockwise

When the camshaft is viewed from the front of the engine, the camshaft rotates in the following direction: ..... Clockwise

The front of the engine is opposite the flywheel end. The left side and the right side of the engine are viewed from the flywheel end. The No. 1 cylinder is the front cylinder.

i04136796

Fuel Injection Lines

WARNING

Contact with high pressure fuel may cause fluid penetration and burn hazards. High pressure fuel spray may cause a fire hazard. Failure to follow these inspection, maintenance and service instructions may cause personal injury or death.

Refer to Operation and Maintenance Manual, “General Hazard Information and High Pressure Fuel Lines” before adjustments and repairs are performed.

NOTICE

Refer to Systems Operation, Testing, and Adjusting, “Cleanliness of Fuel System Components” for detailed information on the standards of cleanliness that must be observed during ALL work on the fuel system.

Ensure that all adjustments and repairs are performed by authorized personnel that have had the correct training.

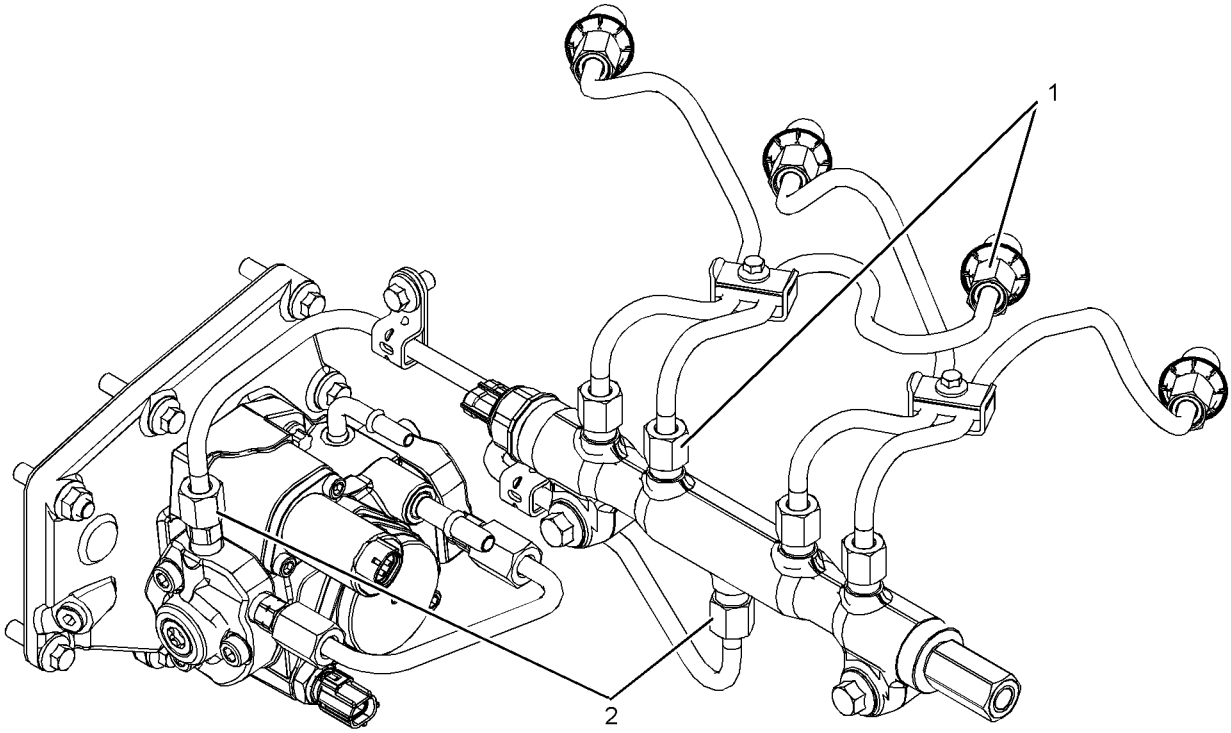

Illustration 2
g02334261
Typical example

(1), (2) Torque for the nuts on the high-pressure fuel lines ..... 40 N·m (30 lb ft)

i04138513

Fuel Injection Pump

Note: The timing of the fuel injection pump will need to be checked by trained personnel. In order to check the timing of the fuel injection pump, refer to Systems Operation, Testing, and Adjusting, “Fuel Injection Pump Timing - Check”.

NOTICE

Refer to Systems Operation, Testing, and Adjusting, “Cleanliness of Fuel System Components” for detailed information on the standards of cleanliness that must be observed during ALL work on the fuel system.

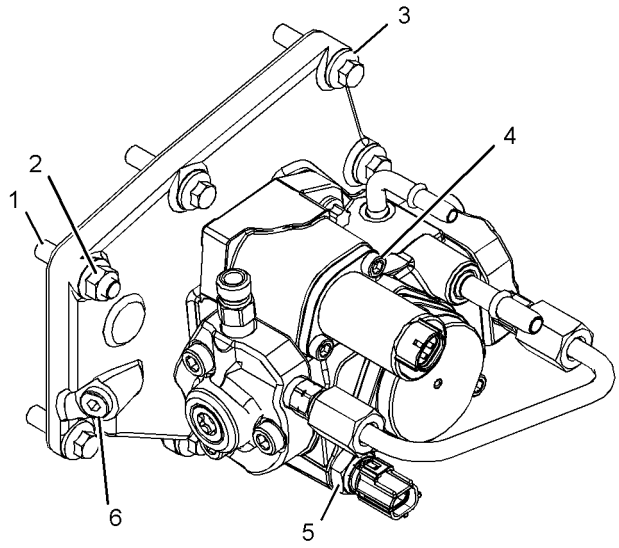

Illustration 3
g02335956
Typical example

(1) Tighten the studs to the following torque. .. 11 N·m (97 lb in)

(2) Tighten the mounting nut to the following torque. ..... 22 N·m (16 lb ft)

(3) Tighten the setscrews to the following torque. ..... 22 N·m (16 lb ft)

(4) Tighten the screws for the suction control valve to the following torque. ..... 9 N·m (80 lb in)

(5) Tighten the fuel temperature sensor to the following torque. ..... 22 N·m (16 lb ft)

(6) Tighten the screw to the following torque. ..... 14 N·m (10 lb ft)

i03631793

Fuel Injectors

NOTICE

Refer to Systems Operation, Testing and Adjusting, "Cleanliness of Fuel System Components" for detailed information on the standards of cleanliness that must be observed during ALL work on the fuel system.

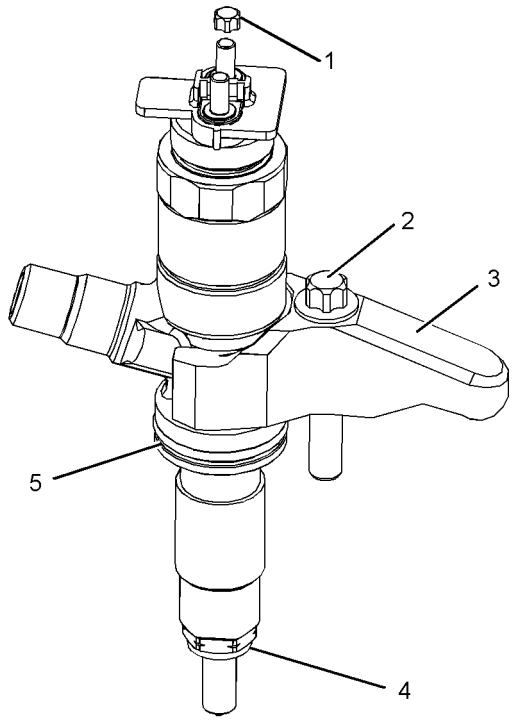

g01862457

Illustration 4

Typical example

(3) Clamp
(4) Washer
(5) O ring seal

(1) Torque for the nuts ..... 2 N·m (18 lb in)

(2) Torque for the bolt in the clamp for the fuel injection nozzle ..... 21 N·m (15.5 lb ft)

i04139569

Fuel Transfer Pump

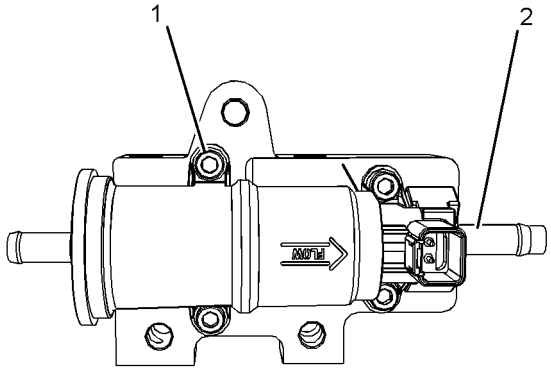

g02337197

Illustration 5

Typical example

(1) Tighten the allen head screws to the following torque. ..... 9 N·m (80 lb in)

(2) Tighten the connection to the following torque. ..... 20 N·m (15 lb ft)

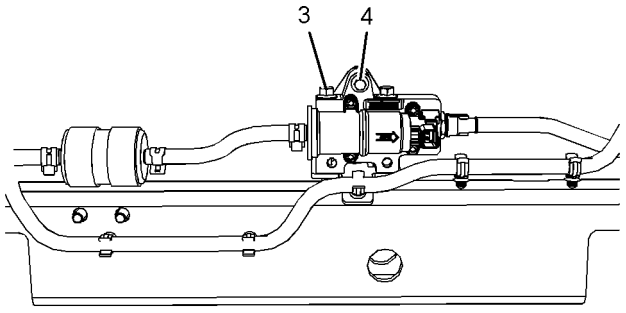

g02337198

Illustration 6

Typical example

(3), (4) Tighten the bolts to the following torque. ..... 22 N·m (16 lb ft)

i04325509

Fuel Filter Base (Single Secondary Fuel Filter Base)

NOTICE

Refer to Systems Operation, Testing and Adjusting, “Cleanliness of Fuel System Components” for detailed information on the standards of cleanliness that must be observed during ALL work on the fuel system.

If necessary, install a new fuel filter (2) to canister (1). Refer to Operation and Maintenance Manual, “Fuel System Secondary Filter - Replace” for the correct procedure.

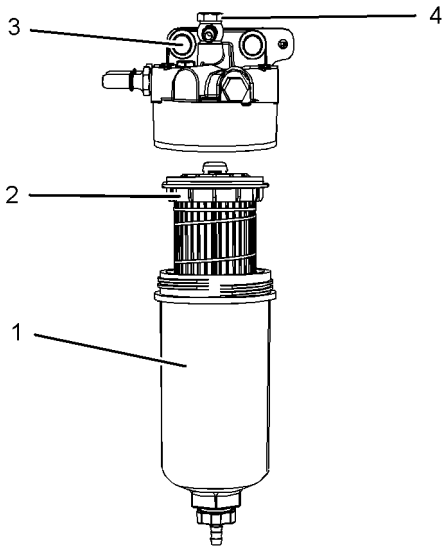

Illustration 7 g02484376

Typical example

(3) Tighten the bolts to the following torque. .. 44 N·m (33 lb ft)

(4) Tighten the bolt to the following torque. ... 17 N·m (13 lb ft)

i04330369

Fuel Filter Base (Twin Secondary Fuel Filter Base)

NOTICE

Refer to Systems Operation, Testing and Adjusting, “Cleanliness of Fuel System Components” for detailed information on the standards of cleanliness that must be observed during ALL work on the fuel system.

If necessary, install a new fuel filter (2) to canister (1). Refer to Operation and Maintenance Manual, “Fuel System Secondary Filter - Replace” for the correct procedure.

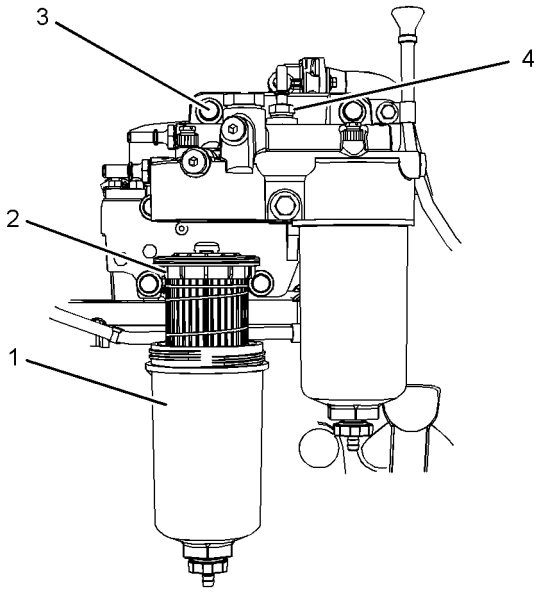

Illustration 8 g02485877

Typical example

(3) Tighten the bolts to the following torque. .. 44 N·m (33 lb ft)

(4) Tighten the bolt to the following torque. ... 20 N·m (15 lb ft)

i04363635

Fuel Filter Base (Primary Fuel Filter Base)

NOTICE

Refer to Systems Operation, Testing and Adjusting, "Cleanliness of Fuel System Components" for detailed information on the standards of cleanliness that must be observed during ALL work on the fuel system.

If necessary, install a new fuel filter element to canister (2). Refer to Operation and Maintenance Manual, "Fuel System Primary Filter (Water Separator) Element - Replace" for the correct procedure.

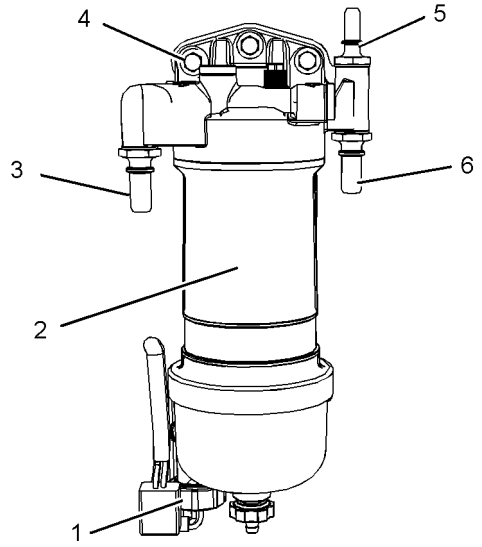

Illustration 9 g02289936

Typical example

Tighten water in fuel switch (1) hand tight.

(3) Tighten the connection to the following torque. ..... 17 N·m (13 lb ft)

(4) Tighten the bolts to the following torque. .. 44 N·m (32 lb ft)

(5) Tighten the connection to the following torque. ..... 17 N·m (13 lb ft)

(6) Tighten the connection to the following torque. ..... 17 N·m (13 lb ft)

i04139570

Fuel Manifold (Rail)

Refer to Operation and Maintenance Manual, "General Hazard Information and High Pressure Fuel Lines" before adjustments and repairs are performed.

NOTICE

Refer to Systems Operation, Testing and Adjusting, "Cleanliness of Fuel System Components" for detailed information on the standards of cleanliness that must be observed during ALL work on the fuel system.

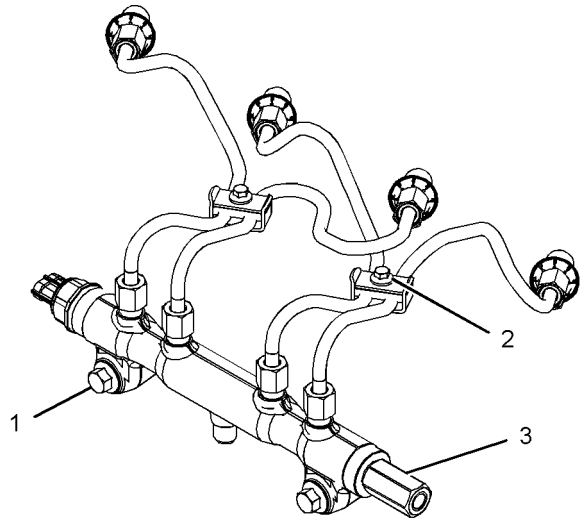

Illustration 10 g02337196

Typical example

(1) Tighten the bolts to the following torque. .. 22 N·m (16 lb ft)

(2) Tighten the bolts to the following torque. .. 10 N·m (89 lb in)

(3) Tighten the fuel pressure relief valve to the following torque. ..... 30 N·m (22 lb ft)

Note: The fuel pressure relief valve (3) should be tightened an additional 24 degrees.

i04381710

Lifter Group

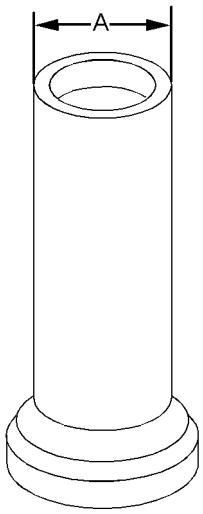

Illustration 11 g01344742

Typical example

(A) Diameter of the lifter body .. 21.938 to 21.963 mm (0.86370 to 0.86468 inch)

Bore diameter in the cylinder block ..... 22.000 to 22.032 mm (0.86614 to 0.86740 inch)

Clearance

Clearance of the lifter ..... 0.038 to 0.095 mm (0.0015 to 0.0037 inch)

i03916469

Rocker Shaft

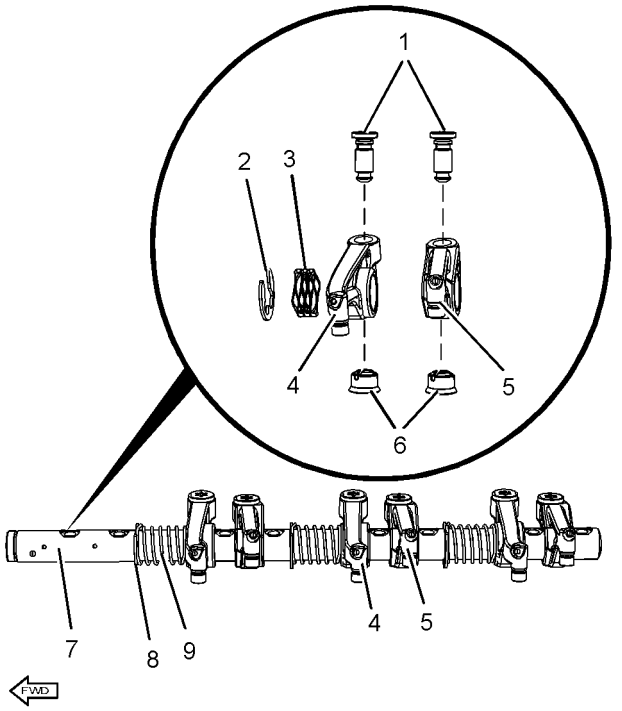

Illustration 12 g02150799

Typical example

(1) Tighten the threaded inserts to the following torque. ..... 30 N·m (22 lb ft)

(2) Retaining clip

(3) Spring

(4) Inlet rocker arm

Diameter of the rocker arm bore .... 25.013 to 25.051 mm (0.9848 to 0.9863 inch)

(5) Exhaust rocker arm

Diameter of the rocker arm bore .... 25.013 to 25.051 mm (0.9848 to 0.9863 inch)

Clearance

Maximum clearance of both the rocker arm bores. ..... 0.089 mm (0.0035 inch)
The service limit for both rocker arm bores ..... 0.17 mm (0.0067 inch)

(6) Guide

(7) Rocker shaft

Diameter of the rocker shaft ..... 24.962 to 24.987 mm (0.98275 to 0.98374 inch)

(8) Retaining clip

(9) Spring

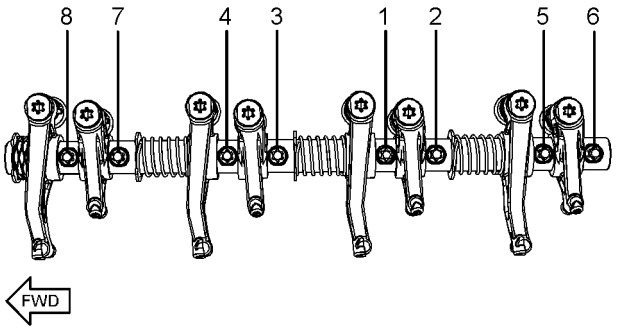

Illustration 13 g02150797

Tightening sequence

Tighten the fasteners in the sequence that is in illustration 13. Tighten the fasteners to the following torque. ..... 35 N·m (26 lb ft)

i04351269

Valve Mechanism Cover

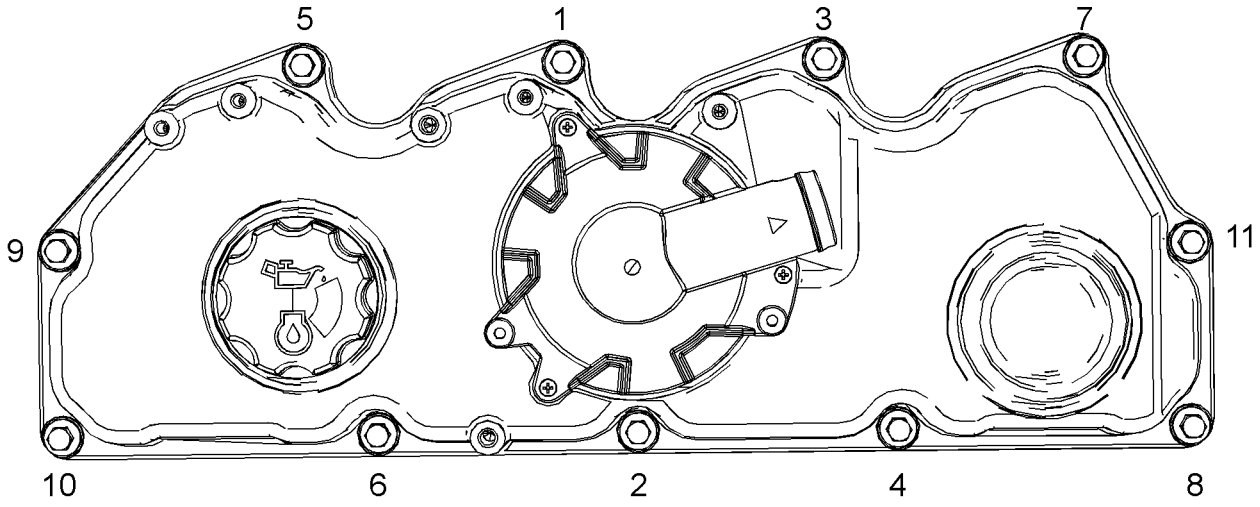

Illustration 14 g02161123

Typical example

Tighten the fasteners for the valve mechanism cover in the sequence that is shown in illustration 14 to the following torque. ..... 22 N·m (16 lb ft)

i04458277

Cylinder Head Valves

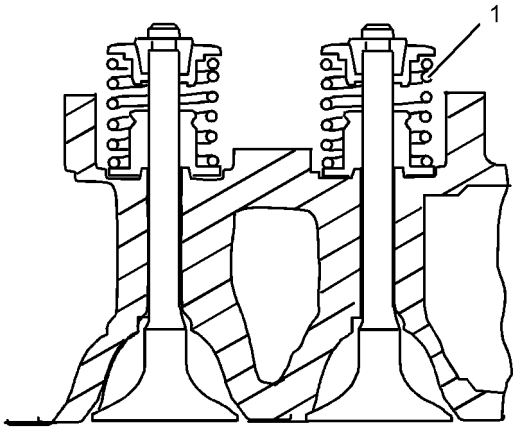

Illustration 15 g01335203

Typical example

When the valve springs (1) are replaced the valve springs must be replaced in pairs.

Table 1

The load for the inlet valve spring	The length of the inlet valve spring
209 to 231 N (47 to 52 lb)	31.5 mm (1.2402 inch)
389.5 to 430.5 N (87.5 to 97 lb)	22.2 mm (0.87401 inch)

Table 2

The load for the exhaust valve spring	The length of the exhaust valve spring
161.5 to 178.5 N (36.3 to 40.1 lb)	31.5 mm (1.2402 inch)
337.9 to 373.5 N (76 to 84 lb)	21.5 mm (0.8465 inch)

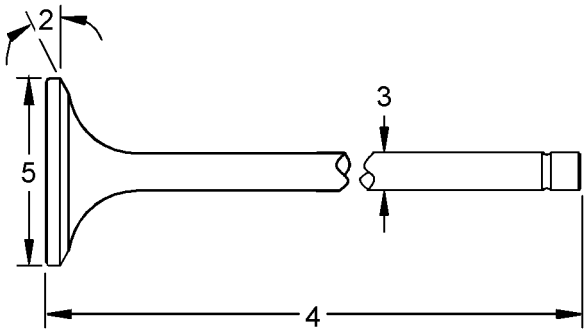

Illustration 16 g01335204

(2) Valve face angle

Inlet ..... 30 degrees
Exhaust ..... 45 degrees

(3) Valve stem diameter

Inlet .. 5.942 to 5.957 mm (0.2339 to 0.2345 inch)
Exhaust ..... 5.927 to 5.942 mm (0.2333 to 0.2339 inch)

Clearance

Maximum clearance of the inlet valve stem ..... 0.05 mm (0.0020 inch)
The service limit for the inlet valve stem ..... 0.08 mm (0.0031 inch)

Clearance

Maximum clearance of the exhaust valve stem ..... 0.065 mm (0.0026 inch)
The service limit for the exhaust valve stem ..... 0.09 mm (0.0035 inch)

(4) Length of valve

Inlet valve ..... 107.925 to 108.375 mm (4.2490 to 4.2667 inch)
Exhaust valve ..... 107.703 to 108.153 mm (4.2403 to 4.2580 inch)

(5) Valve head

Diameter of inlet valve head ..... 35 mm (1.3780 inch)
Diameter of exhaust valve head ..... 33 mm (1.2992 inch)

i04136793

Cylinder Head

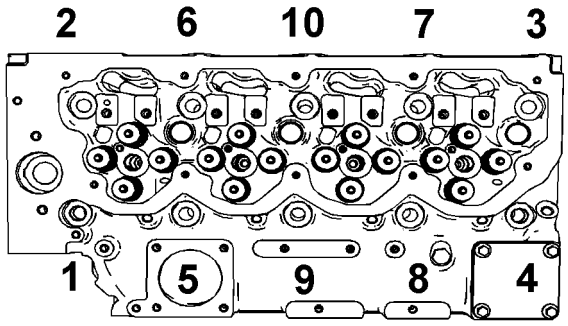

Illustration 17 g01250785

Typical example

Lubricate the threads and the underside of the head bolts with clean engine oil.

Tighten the bolts in the sequence that is shown in illustration 17 to the following torque. ..... 50 N·m (37 lb ft)
Tighten the bolts again to the following torque. ..... 100 N·m (74 lb ft)
Tighten the head bolts to the additional amount. ..... 225 degrees

Minimum thickness of cylinder head ..... 150.8 mm (5.93700 inch)

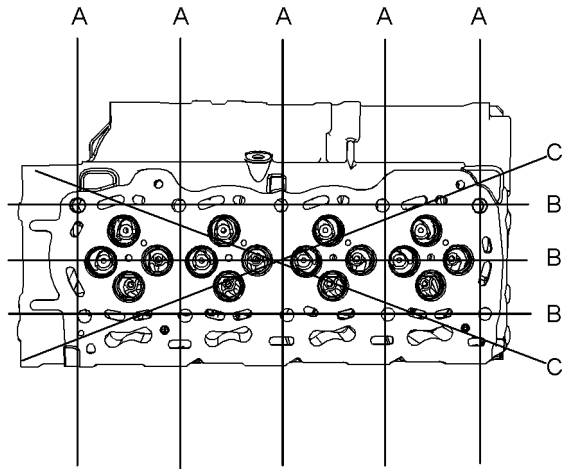

Illustration 18 g01455374

Note: The maximum distortion of the bottom face of the cylinder head is given in table 3.

Table 3

Dimension	Maximum Permissible Distortion
Width (A)	0.03 mm (0.0018 inch)
Length (B)	0.05 mm (0.0019 inch)
Diagonal Line (C)	0.05 mm (0.0019 inch)

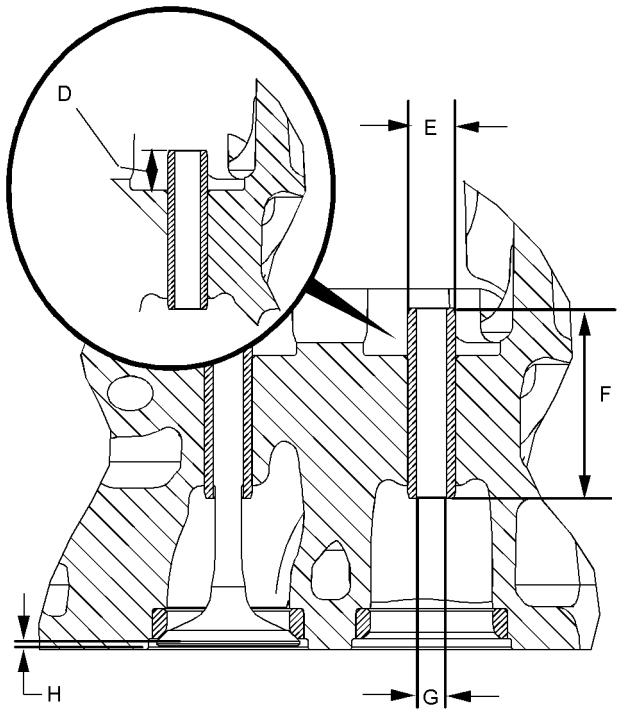

Illustration 19 g02328933

Typical example

(D) Valve guide height from the top of the valve guide to the valve spring seat ..... 10.75 to 11.25 mm (0.42323 to 0.44291 inch)

(E) Outside diameter of the valve guides ..... 11.029 to 11.040 mm (0.43421 to 0.43464 inch)

(F) Length of the valve guides ... 43.75 to 44.25 mm (1.72244 to 1.74212 inch)

(G) Internal diameter of the valve guides ..... 7.007 to 7.020 mm (0.27587 to 0.27638 inch)

(H) Valve depths

Inlet .. 0.905 to 1.163 mm (0.0356 to 0.0458 inch)
The service limit for the depth of the inlet valve ..... 1.41 mm (0.0555 inch)
Exhaust ..... 0.876 to 1.131 mm (0.0345 to 0.0445 inch)
The service limit for the exhaust valve depth ..... 1.38 mm (0.0543 inch)

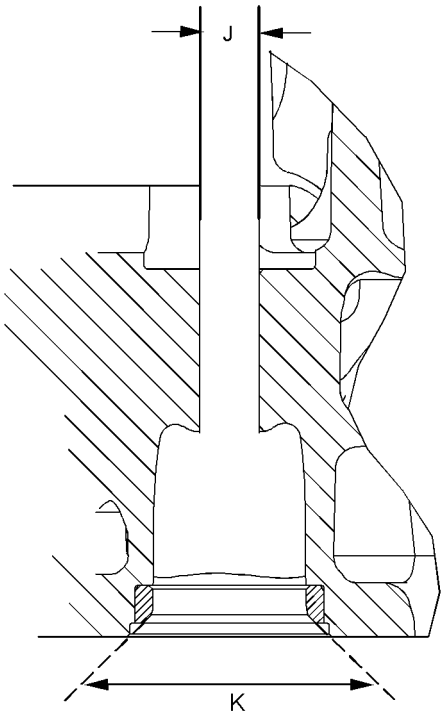

g02474819

Illustration 20

Typical example

(J) Diameter of the parent bore in the cylinder head ..... 11.000 to 11.022 mm (0.43307 to 0.43394 inch)

(K) Seat angle

Inlet ..... 119.15 degrees
Exhaust ..... 89.15 degrees

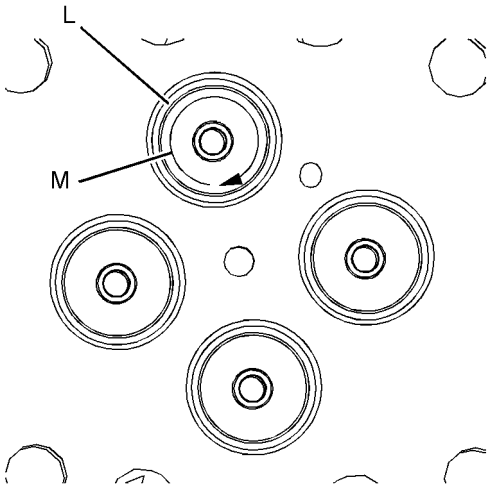

g02475018

Illustration 21

Typical example

(L) Seat surface finish ..... Ra 0.8 microns

(M) Concentricity of valve seat to valve guide parent bore Maximum Total Indicated Reading (TIR) ..... 0.08 mm (0.00315 inch)

i04303429

Turbocharger (Series Turbochargers)

Note: For the correct procedure to install the turbochargers, refer to Disassembly and Assembly, “Turbocharger - Install”.

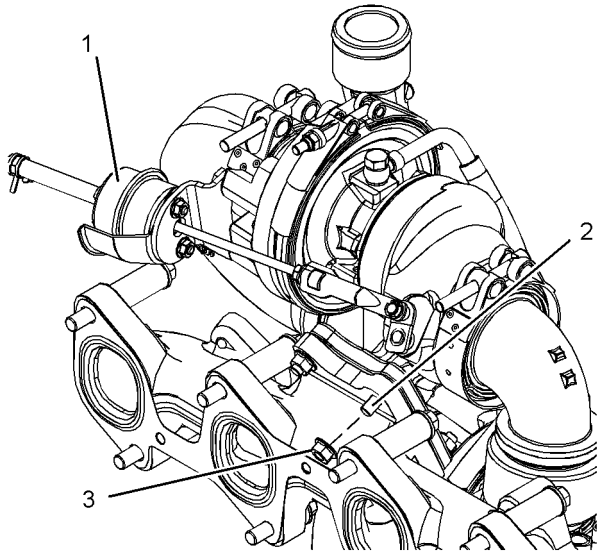

g02467657

Illustration 22

Typical example

(1) Actuator

The test pressure for the wastegate actuator ..... 100 kPa (14.5 psi)
The movement for the rod actuator ..... 1 mm (0.0394 inch)

(2) Tighten the studs to the following torque. .. 11 N·m (97 lb in)

(3) Tighten the nuts to the following torque. .. 24 N·m (18 lb ft)

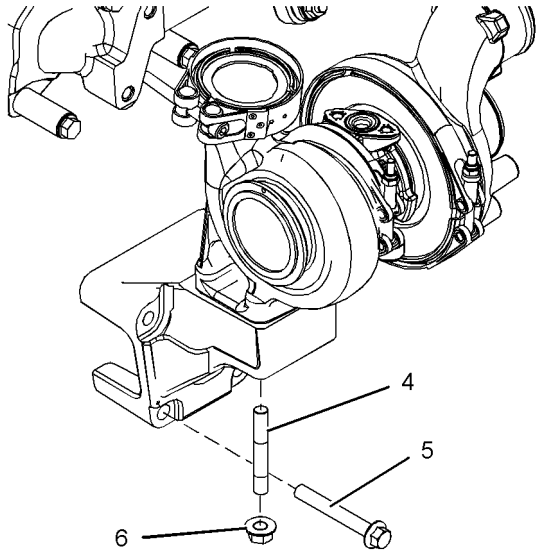

Illustration 23 g02467764
Typical example

(4) Tighten the studs to the following torque. ..... 18 N·m (13 lb ft)

(5) Tighten the bolts to the following torque. .. 44 N·m (32 lb ft)

(6) Tighten the nuts to the following torque. .. 44 N·m (32 lb ft)

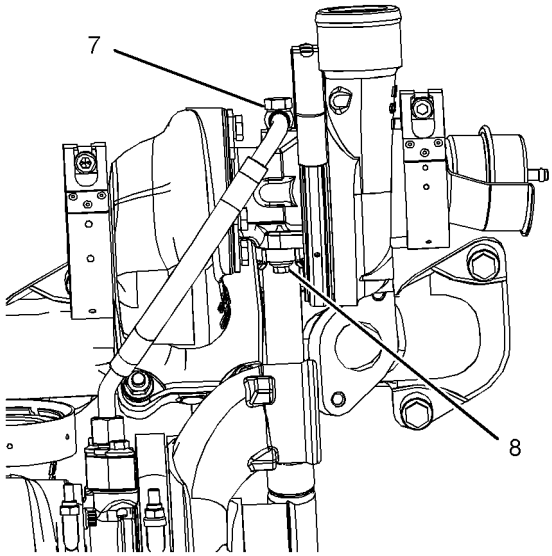

Illustration 24 g02467778
Typical example

(7) Tighten the bolt to the following torque. ... 22 N·m (16 lb ft)

(8) Tighten the bolts to the following torque. ... 9 N·m (80 lb in)

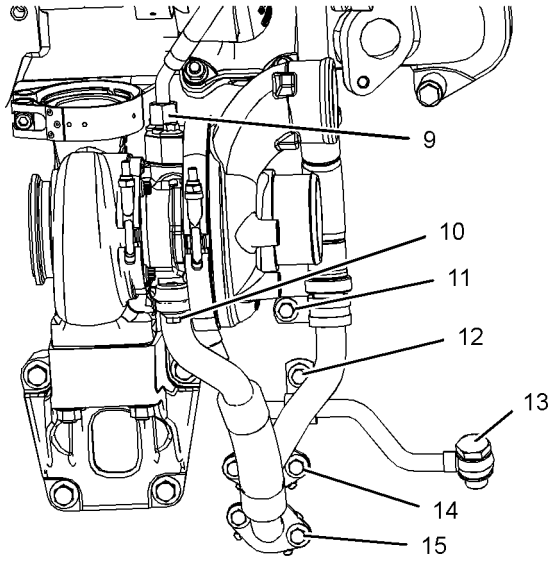

Illustration 25 g02467817
Typical example

(9) Tighten the nut to the following torque. .. (22 lb ft)

(10), (14), (15) Tighten the bolts to the following torque. ..... 22 N·m (16 lb ft)

(11), (12) Tighten the bolt to the following torque. ..... 18 N·m (13 lb ft)

(13) Tighten the bolt to the following torque. .. 40 N·m (29 lb ft)

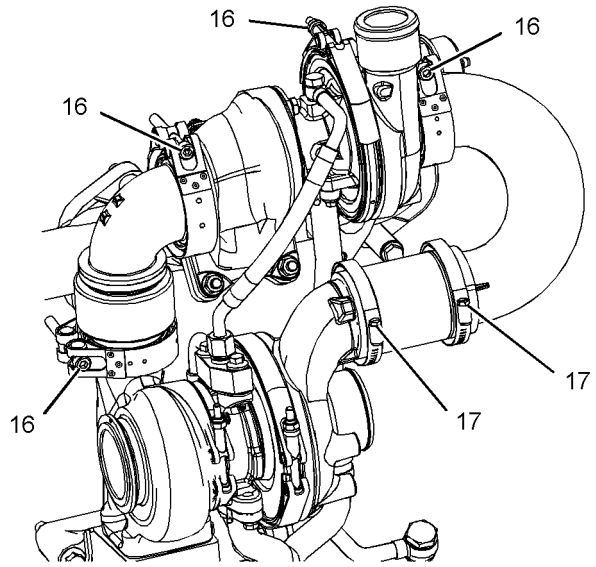

Illustration 26 g02469656
Typical example

(16) Tighten the clamps to the following torque. ..... 12 N·m (106 lb in)

(17) Tighten the clamps to the following torque. ..... 6 N·m (53 lb in)

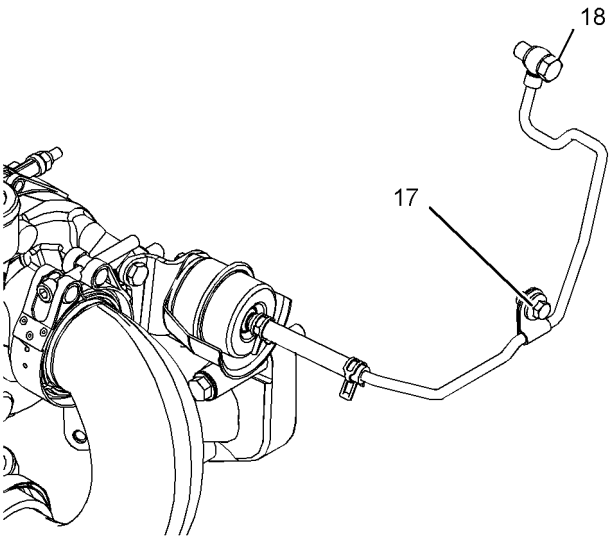

Illustration 27 g02469659

Typical example

(18) Tighten the bolts to the following torque. ..... 22 N·m (16 lb ft)

(19) Tighten the bolt to the following torque. .. 15 N·m (11 lb ft)

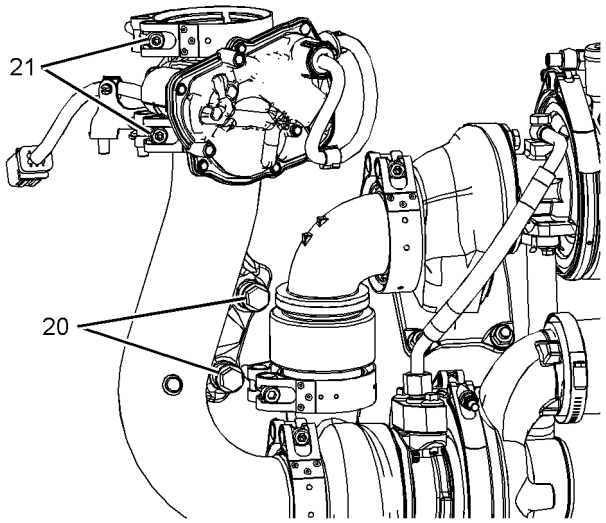

Illustration 28 g02469676

Typical example

(20) Tighten the bolts to the following torque. ..... 22 N·m (16 lb ft)

(21) Tighten the clamps to the following torque. ..... 12 N·m (106 lb in)

i04303430

Turbocharger (Single Turbocharger)

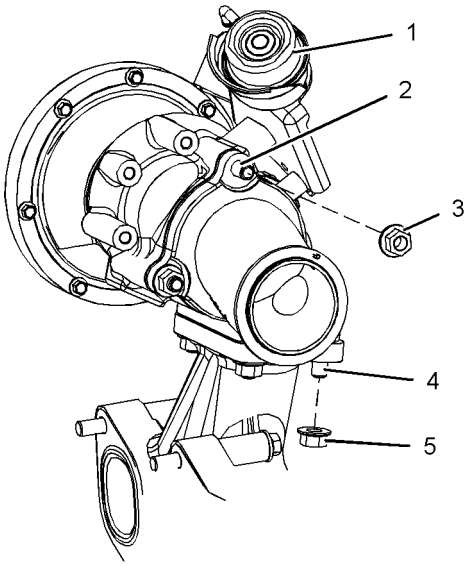

Illustration 29 g02469696

Typical example

(1) Actuator

The test pressure for the wastegate actuator ..... 100 kPa (14.5 psi)
The movement for the rod actuator ..... 1 mm (0.0394 inch)

(2) Tighten the studs to the following torque. ..... 18 N·m (13 lb ft)

(3) Tighten the nuts to the following torque. .. 44 N·m (32 lb ft)

(4) Tighten the studs to the following torque. ..... 18 N·m (13 lb ft)

(5) Tighten the nuts to the following torque. .. 44 N·m (32 lb ft)

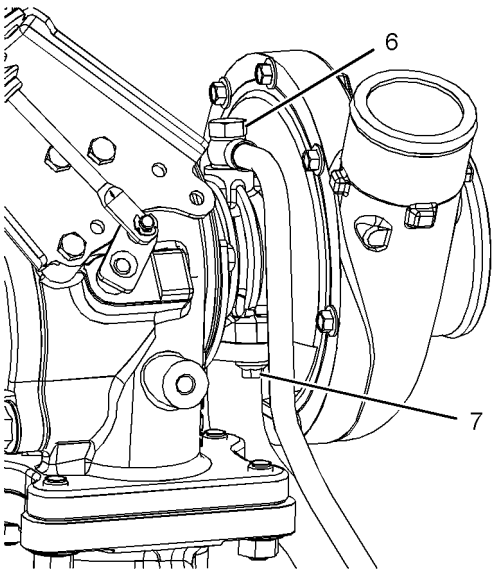

Illustration 30 g02469717
Typical example

(6) Tighten the bolt to the following torque. ... 22 N·m (16 lb ft)

(7) Tighten the bolt to the following torque. ..... 9 N·m (80 lb in)

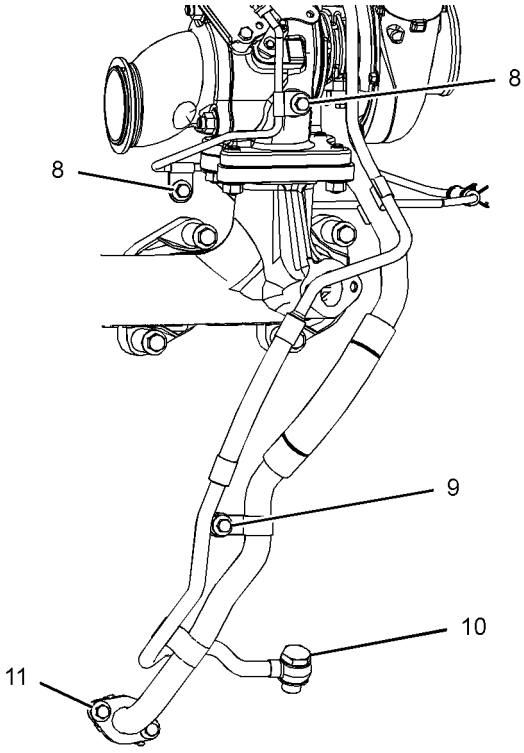

Illustration 31 g02469740
Typical example

(8) Tighten the bolt to the following torque. ... 22 N·m (16 lb ft)

(9) Tighten the bolts to the following torque. .. 18 N·m (13 lb ft)

(10) Tighten the bolt to the following torque. .. 40 N·m (30 lb ft)

(11) Tighten the bolts to the following torque. ..... 22 N·m (16 lb ft)

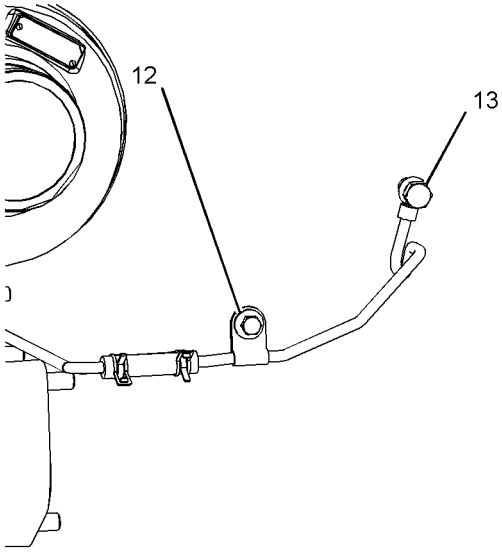

Illustration 32 g02469836
Typical example

(12) Tighten the bolt to the following torque. .. 22 N·m (16 lb ft)

(13) Tighten the bolt to the following torque. .. 15 N·m (11 lb ft)

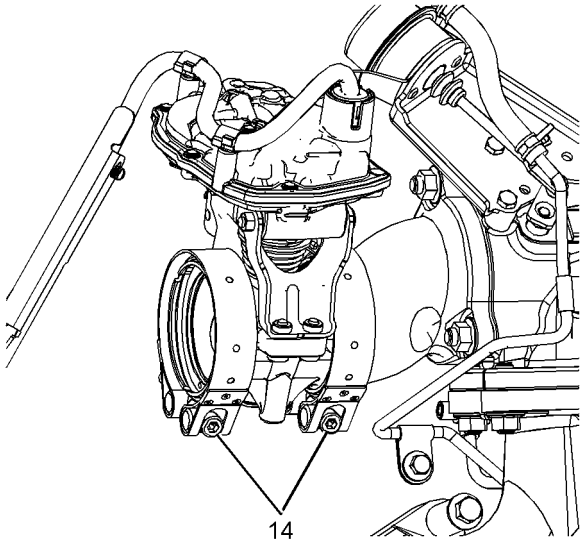

Illustration 33 g02469857
Typical example

(14) Tighten the clamps to the following torque. ..... 12 N·m (106 lb in)

i04138516

Exhaust Gas Valve (NRS)

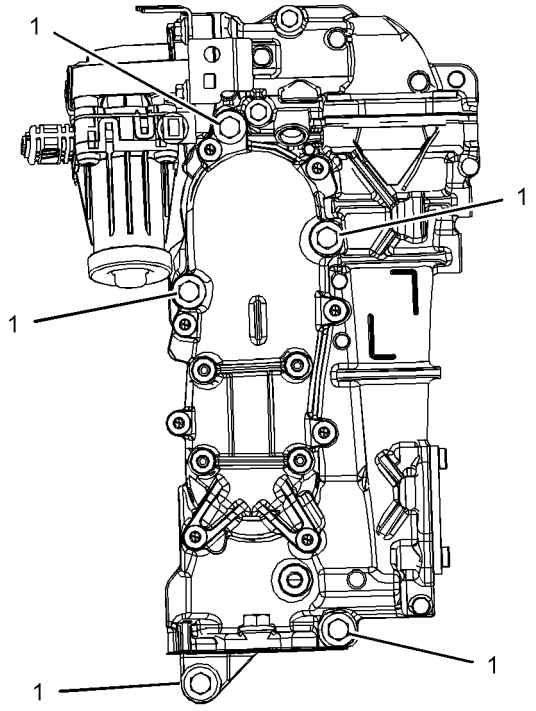

Illustration 34 g02337096

Typical example

(1) Tighten the bolts to the following torque. .. 22 N·m (16 lb ft)

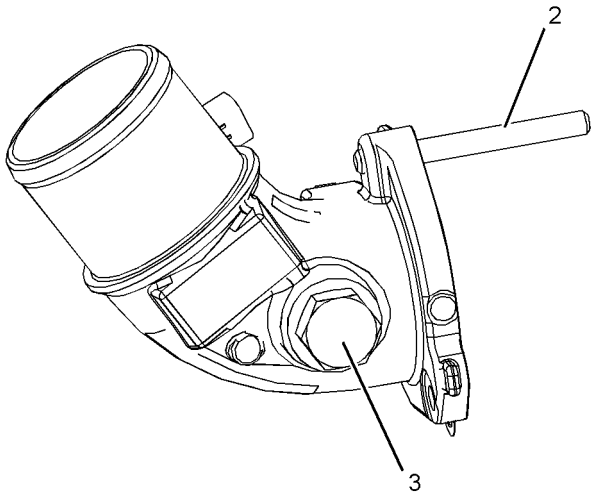

Illustration 35 g02337116

Typical example

(2) Tighten the stud to the following torque. .. 11 N·m (97 lb in)

(3) Tighten the plug to the following torque. .. 35 N·m (26 lb ft)

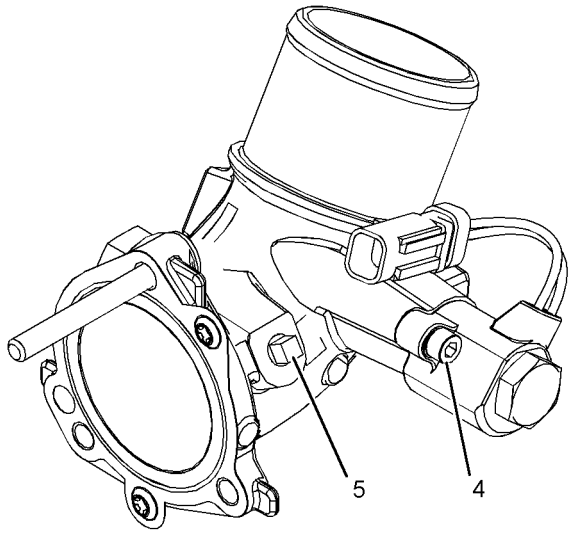

Illustration 36 g02337117

Typical example

(4) Tighten the bolts to the following torque. ... 9 N·m (80 lb in)

(5) Tighten the plug to the following torque. .. 9.5 N·m (84 lb in)

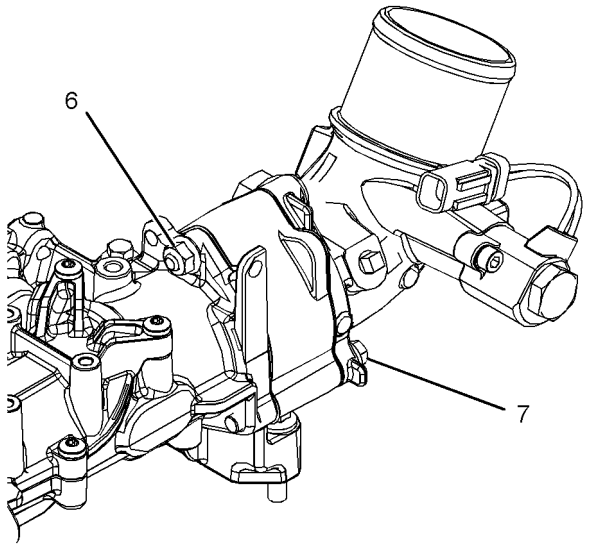

Illustration 37 g02337118
Typical example

(6) Tighten the nut to the following torque. .... 18 N·m (13 lb ft)

(7) Tighten the bolts to the following torque. .. 18 N·m (13 lb ft)

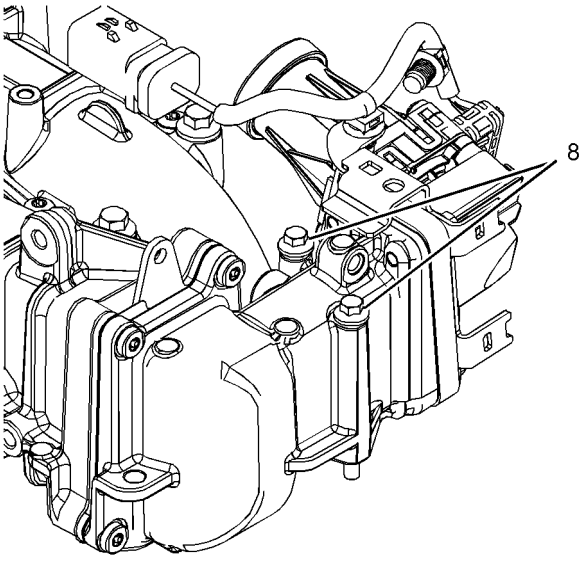

Illustration 38 g02337119
Typical example

(8) Tighten the bolts to the following torque. ... 9 N·m (80 lb in)

i04448752

Exhaust Sensor and Lines (NRS)

Table 4

Required Tools			
Tool	**Part Number**	**Part Description**	**QTY**
A	-	Bostik Pure Nickel Anti-Seize Compound	1

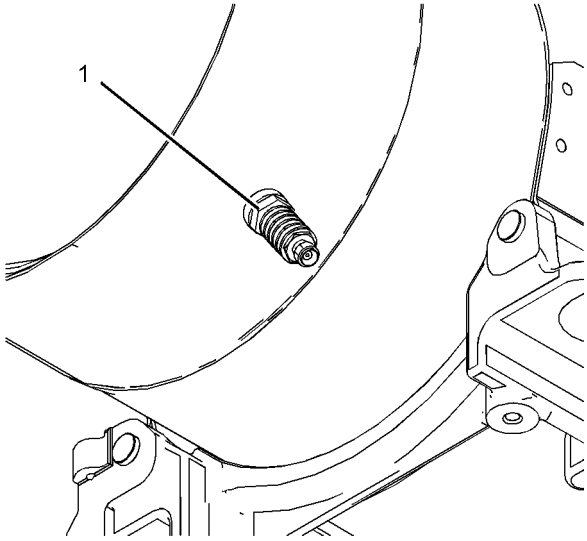

Illustration 39 g02148954
Typical example

Note: Apply Tooling (A) to the sensors before the sensors are installed.

(1) Tighten the sensors to the following torque. ..... 45 N·m (33 lb ft)

Tighten the harness for the sensors (not shown) to the following torque. ..... 1.2 N·m (10.6 lb in)

i04138514

Exhaust Cooler (NRS)

Note: When the pipes for the exhaust cooler are removed or installed, care must be taken so that the pipes are not bent or the pipes are not damaged.

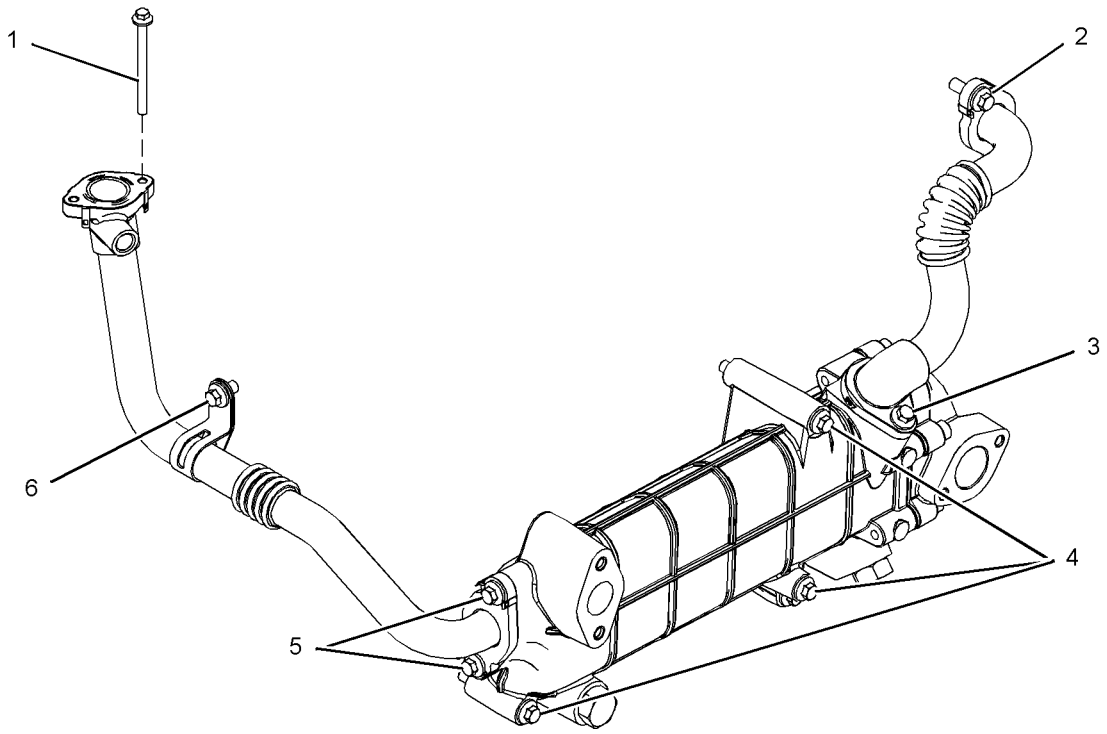

g02337136

Illustration 40

Typical example

(1) Tighten the bolts to the following torque. ... 9 N·m (80 lb in)

(2) Tighten the bolts to the following torque. .. 22 N·m (16 lb ft)

(3) Tighten the bolts to the following torque. .. 22 N·m (16 lb ft)

(4) Tighten the bolts to the following torque. .. 22 N·m (16 lb ft)

(5) Tighten the bolts to the following torque. .. 22 N·m (16 lb ft)

(6) Tighten the bolt to the following torque. ... 22 N·m (16 lb ft)

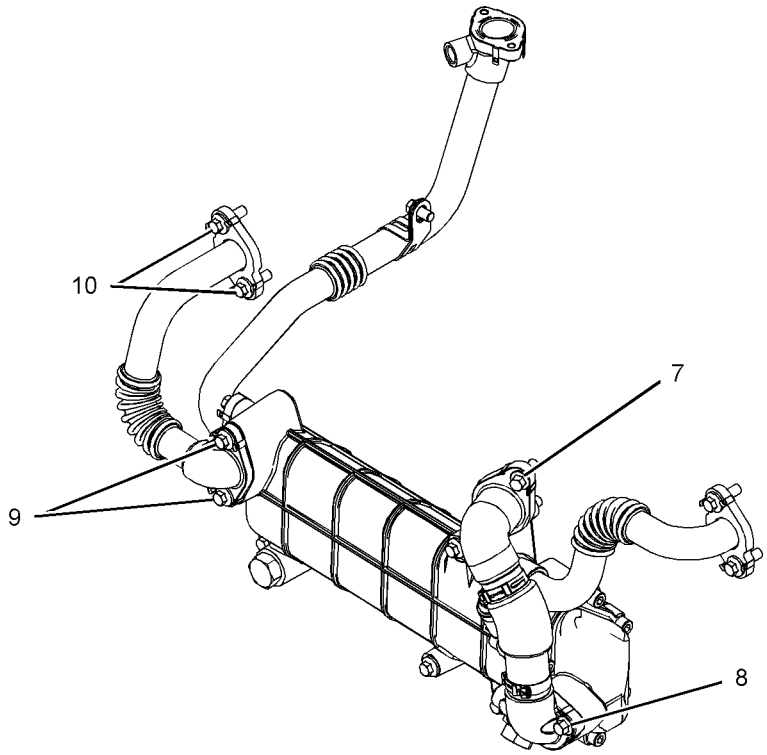

Illustration 41
g02337137
Typical example

(7), (8) Tighten the bolts to the following torque. ..... 22 N·m (16 lb ft)

(9) Tighten the bolts to the following torque. .. 22 N·m (16 lb ft)

(10) Tighten the bolts to the following torque. ..... 22 N·m (16 lb ft)

i03914512

Exhaust Manifold

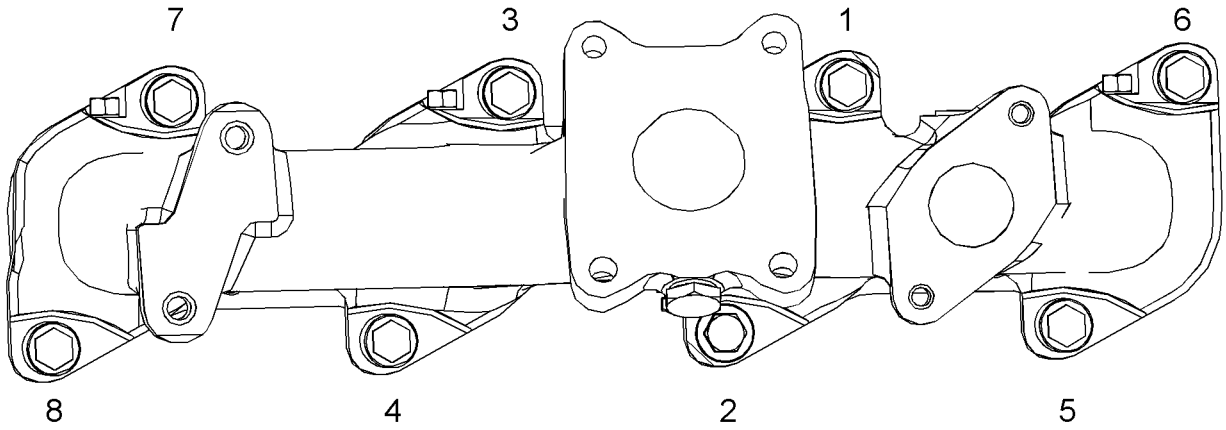

g02150456

Illustration 42

Typical example

Tighten the exhaust manifold bolts in the sequence that is shown in illustration 42 to the following torque. ..... 44 N·m (32 lb ft)

i03936932

Flexible Exhaust Pipe

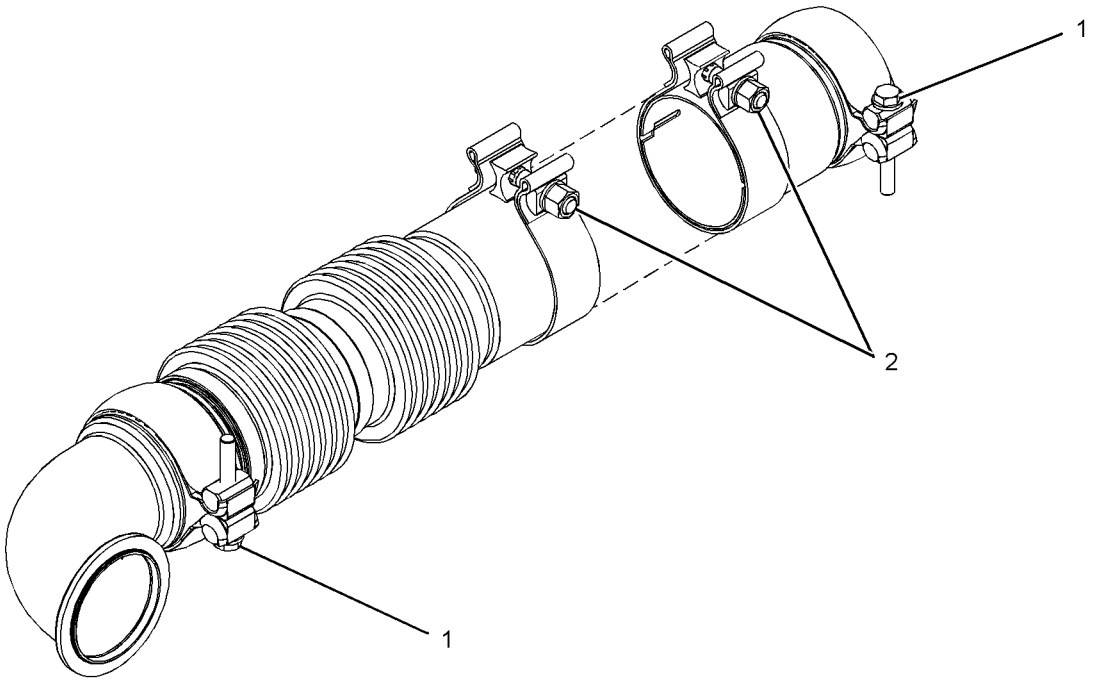

Illustration 43
g02155429
Typical example

(1) Tighten the clamp to the following torque. ..... 35 N·m (26 lb ft)

(2) Tighten the clamp to the following torque. ..... 55 N·m (41 lb ft)

Refer to Disassembly and Assembly for the correct procedure to install the flexible exhaust pipe.

i04229372

Diesel Particulate Filter

Note: To remove and install the Diesel Particulate Filter (DPF), refer to Disassembly and Assembly for the correct procedures.

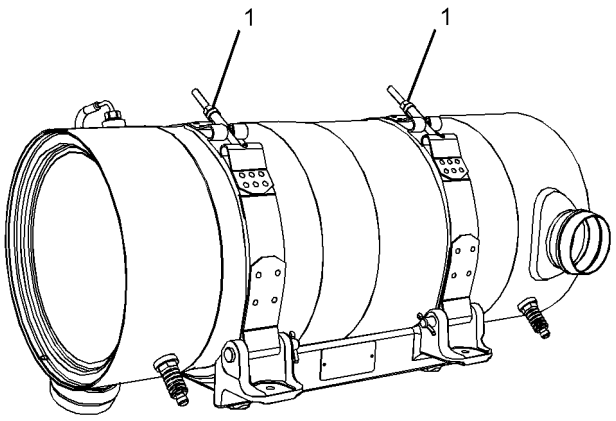

Illustration 44 g02405938

Typical example

(1) Tighten the nuts on clamps to the following torque. ..... 17 N·m (13 lb ft)

i04156670

Camshaft

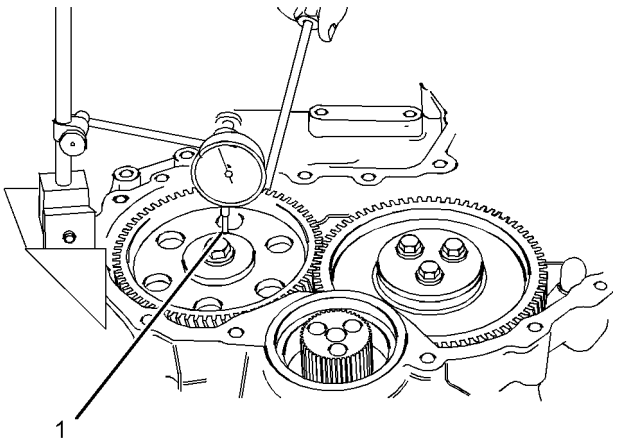

Illustration 45 g01927854

Checking the end play of the camshaft

(1) End play of a camshaft ..... 0.106 to 0.558 mm (0.00417 to 0.02197 inch)

Maximum permissible end play of a worn camshaft ..... 0.62 mm (0.0244 inch)

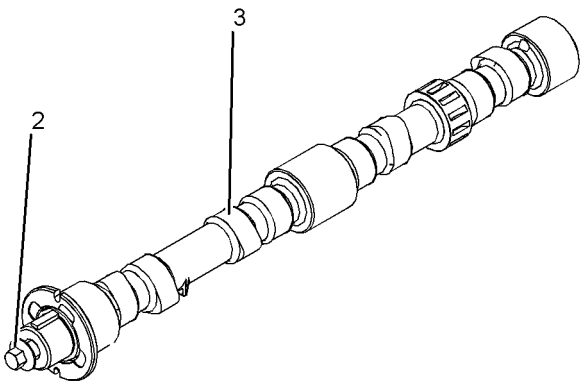

Illustration 46 g02150828

Typical example

(2) Bolt

Torque for the 8.8 graded bolt .. 95 N·m (70 lb ft)
Torque for the 10.9 graded bolt ..... 120 N·m (89 lb ft)

(3) The diameters of the camshaft journals are given in the following tables.

Table 5

Camshaft Journals from the Front End of the Engine	Standard Diameter
1 Front	50.711 to 50.737 mm (1.9965 to 1.9975 inch)
2	50.457 to 50.483 mm (1.9865 to 1.9875 inch)
3 Rear	49.949 to 49.975 mm (1.9665 to 1.9675 inch)

Maximum wear on the camshaft journals ... 0.05 mm (0.0021 inch)

Check the camshaft lobes for visible damage. If a new camshaft is installed, you must install new lifters.

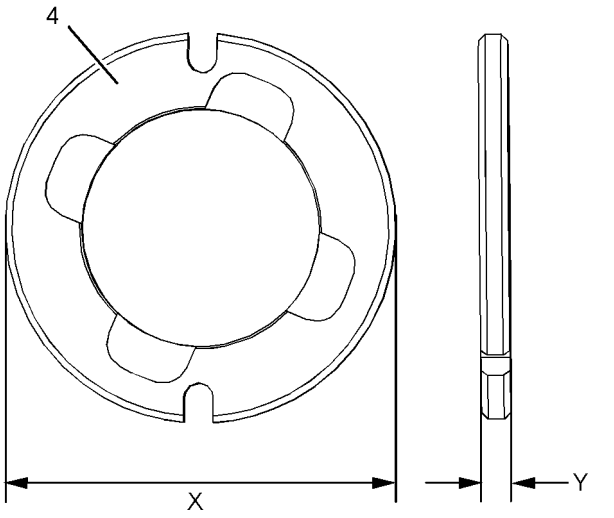

Illustration 47 g02474757
Typical example

(4) Camshaft thrust washer

Outer diameter (X) ..... 72.949 to 73.000 mm (2.872 to 2.874 inch)
Thickness (Y) ..... 5.486 to 5.537 mm (0.21598 to 0.21799 inch)

i03916857

Camshaft Bearings

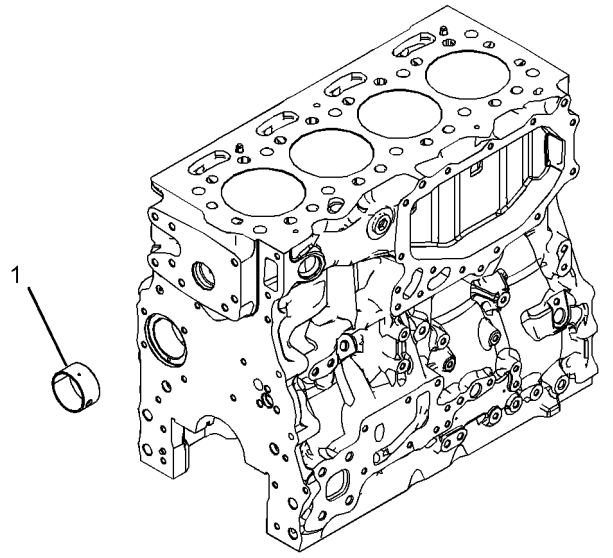

Illustration 48 g02150875
Typical example

(1) The diameter of the installed camshaft bearing ..... 50.787 to 50.848 mm (1.9995 to 2.0019 inch)

i03914549

Engine Oil Filter Base

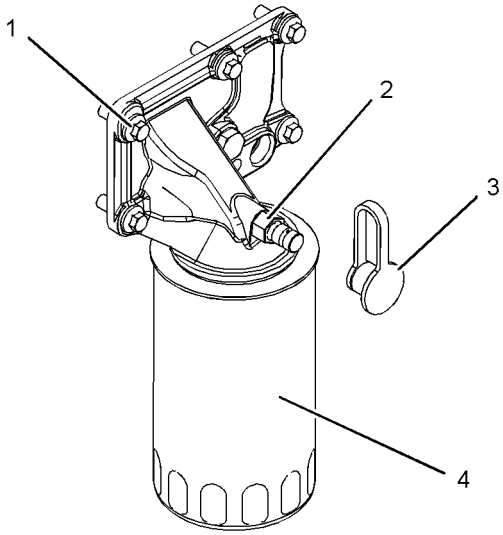

Illustration 49 g02150462
Typical example

(1) Setscrew

Torque for the setscrews ..... 22 N·m (16 lb ft)

(2) Dust cap

(3) Oil sampling valve

Torque for the Oil sampling valve ..... 12 N·m (106 lb in)

Torque for the plug (if equipped) .. 12 N·m (106 lb in)

(4) Engine oil filter

Torque for the engine oil filter .. 12 N·m (106 lb in)

i04406752

Engine Oil Cooler

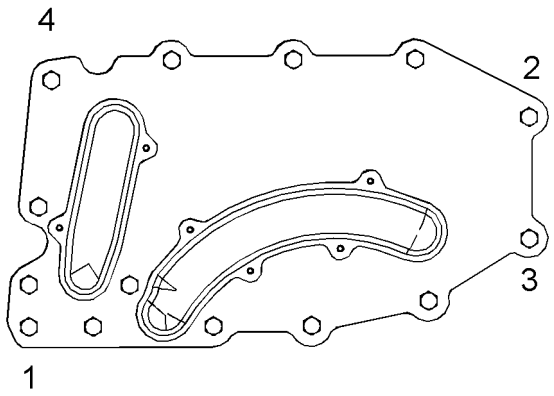

Illustration 50 g02600976

Typical example

Tighten the setscrews in the sequence that is in illustration 50 to the following torque. ..... 10 N·m (89 lb in)

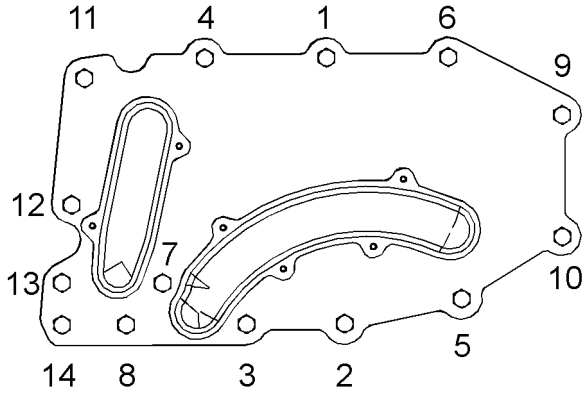

Illustration 51 g02600977

Typical example

Tighten the setscrews in the sequence that is in illustration 51 to the following torque. ..... 26 N·m (19 lb ft)

i04346632

Engine Oil Pump

Type ..... Gear-driven differential rotor

Number of lobes

Inner rotor 6
Outer rotor 7

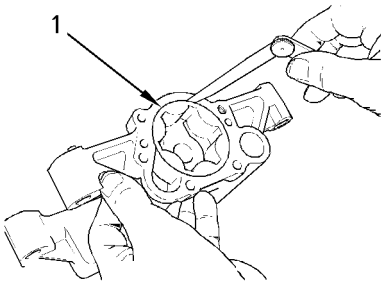

Illustration 52 g00938064

Typical example

(1) Clearance of the outer rotor to the body ..... 0.050 to 0.330 mm (0.0020 to 0.0130 inch)

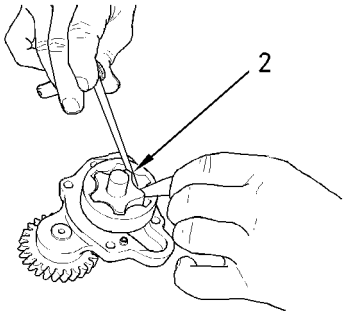

Illustration 53 g00938061

Checking the clearance

(2) Service limit of inner rotor to outer rotor ..... 0.080 to 0.250 mm (0.0031 to 0.0098 inch)

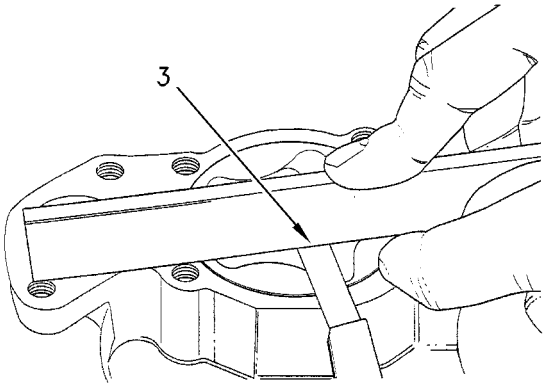

Illustration 54 g00938799
Checking the end play

(3) End play of rotor assembly

Inner rotor ..... 0.050 to 0.180 mm (0.0020 to 0.0071 inch)
Outer rotor ..... 0.050 to 0.180 mm (0.0020 to 0.0071 inch)

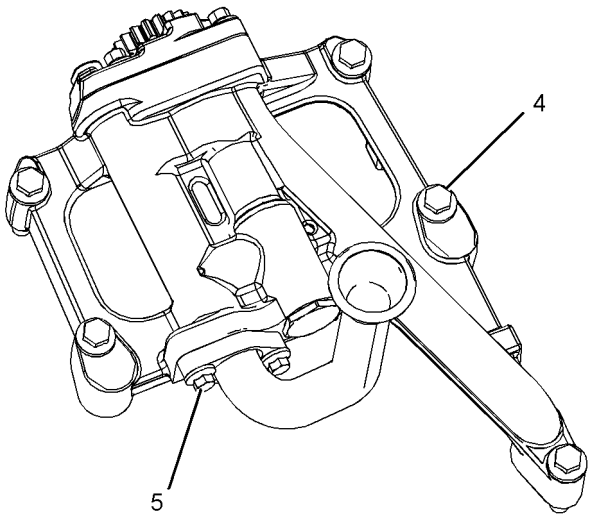

Illustration 55 g02501636
Typical example

(4) Tighten the bolts to the following torque. .. 44 N·m (32 lb ft)

(5) Tighten the bolts to the following torque. .. 22 N·m (16 lb ft)

i03994212

Engine Oil Pressure

The minimum oil pressure at a maximum engine speed of 2200 rpm and at normal operating temperature is the following value. .. 280 kPa (40 psi)

i04315734

Engine Oil Pan

Table 6

Required Tools			
Tool	**Part Number**	**Part Description**	**Qty**
A	-	Loctite 5900	1

Front sealant

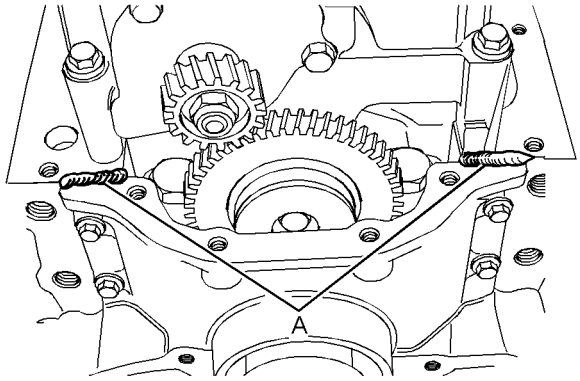

Illustration 56 g01254690
Applying sealant

Apply Tooling (A) to the cylinder block and to the timing case.

Note: Apply a sealant bead of 3.5 mm (0.1378 inch) that is shown in illustration 56.

Rear sealant

Note: Install the rear oil seal before sealant is applied to the bridge.

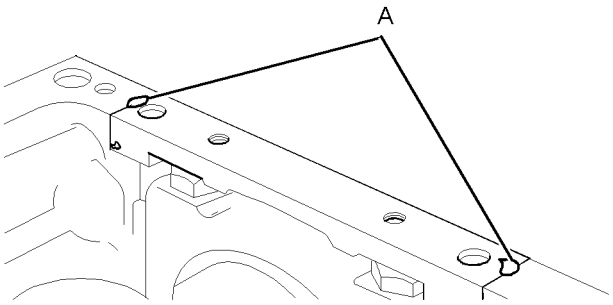

Illustration 57 g01254887

Applying sealant

ApplyTooling (A) to the bridge. The sealant must not protrude more than 5 mm (0.1969 inch) above the bridge.

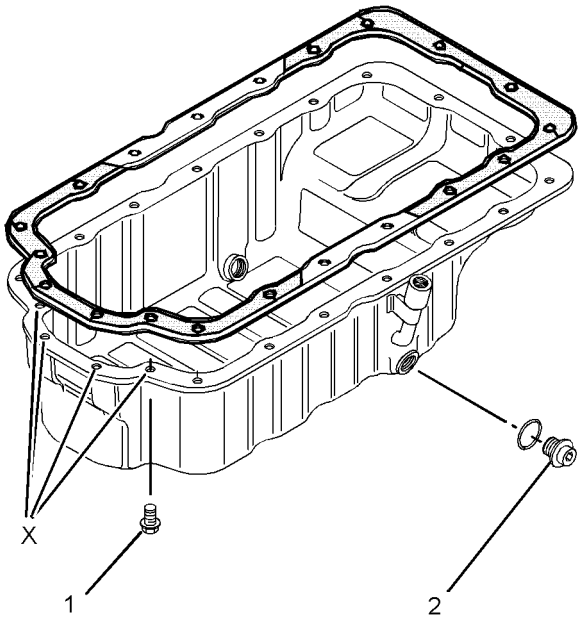

Illustration 58 g01255016

Typical example

(1) Tighten the four front bolts in position (X) to the following torque. ..... 22 N·m (16 lb ft)

Tighten the remaining bolts to the following torque. ..... 22 N·m (16 lb ft)

(2) Drain plug

Tighten the drain plug for the engine oil pan to the following torque. ..... 34 N·m (25 lb ft)

i03969629

Crankcase Breather

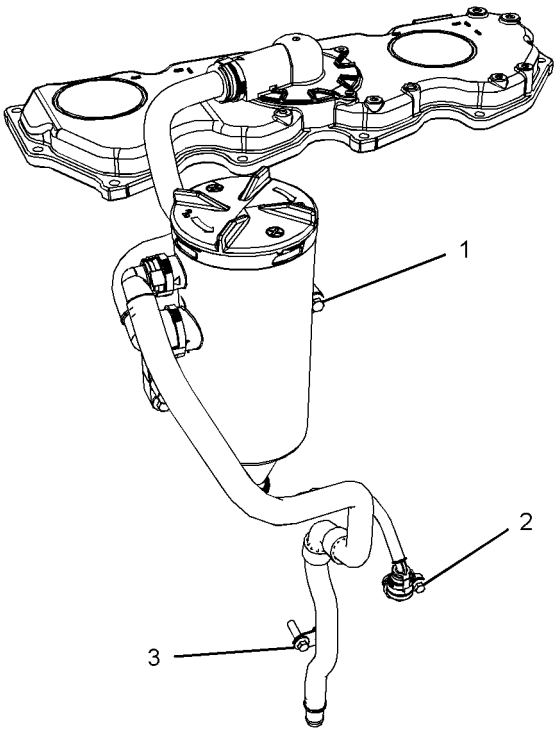

Illustration 59 g02162137

Typical example

(1), (2), (3) Tighten the setscrews to the following torque. ..... 22 N·m (16 lb ft)

i03916250

Water Temperature Regulator and Housing

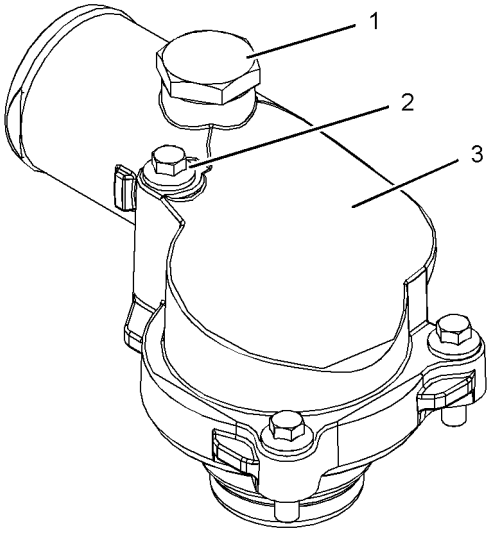

Illustration 60 g02150761

Typical example

(3) Water temperature regulator housing

(1) Torque for the vent plug ..... 22 N·m (16.22 lb ft)

(2) Torque for the bolts that fasten the housing to the cylinder head ..... 22 N·m (16 lb ft)

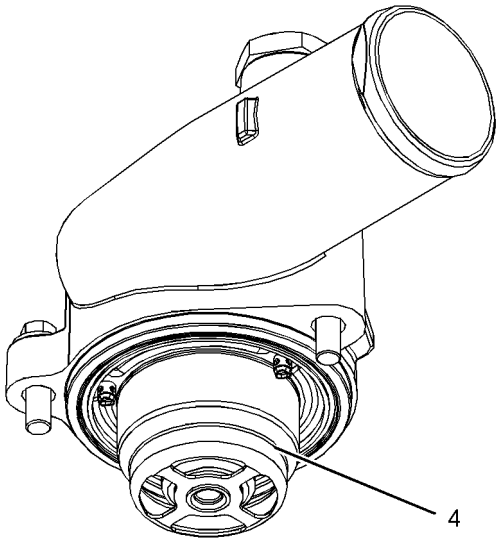

Illustration 61 g02150762

Typical example

(4) Water temperature regulator

Opening temperature ..... 80° to 84°C (151° to 176°F)

Maximum open length of 11 mm (0.43307 inch) is achieved at the following temperature. ..... 94° C (201° F)

i03916132

Water Pump

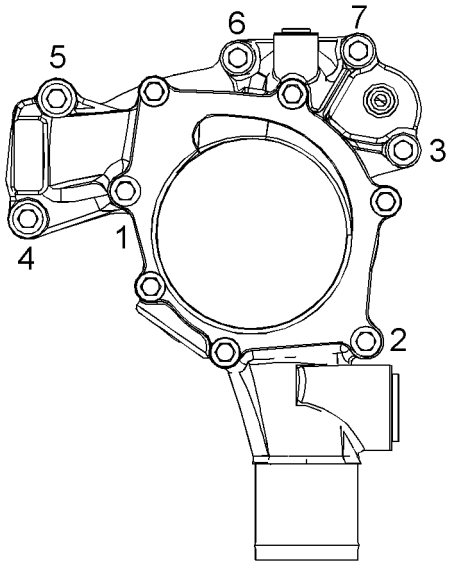

Illustration 62 g02150757

Tightening sequence

Tighten the setscrews in the numerical sequence that is shown in illustration 62 to the following torque. ..... 22 N·m (16 lb ft)

i03917011

Cylinder Block

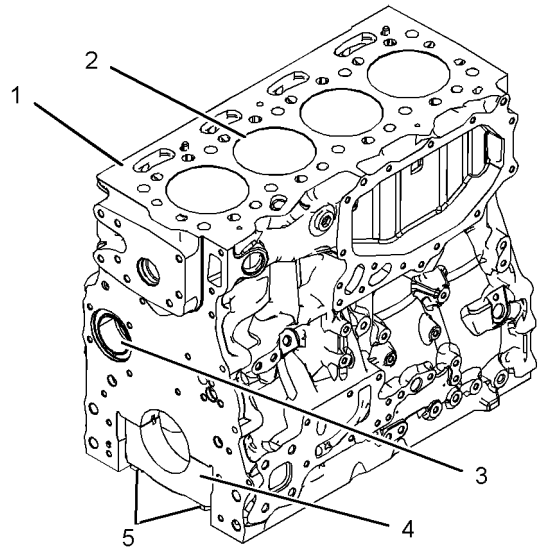

g02150944

Illustration 63

Typical example

(1) Cylinder block

(2) Cylinder bore ..... 105.000 to 105.025 mm (4.1338 to 4.1348 inch)

The maximum permissible wear for the cylinder bore ..... 0.15 mm (0.0059 inch)

(3) Camshaft bearings

Diameter of the bushing in the cylinder block for the number 1 camshaft bearing ..... 55.563 to 55.593 mm (2.1875 to 2.1887 inch)

Diameter of the bore in the cylinder block for the number 2 camshaft journal ..... 50.546 to 50.597 mm (1.9900 to 1.9920 inch)

Diameter of the bore in the cylinder block for the number 3 camshaft journal ..... 50.292 to 50.343 mm (1.9800 to 1.9820 inch)

Diameter of the bore in the cylinder block for the number 4 camshaft journal ..... 50.038 to 50.089 mm (1.9700 to 1.9720 inch)

(4) Main bearings

Bore in the cylinder block for the main bearings ..... 88.246 to 88.272 mm (3.4742 to 3.4753 inch)

(5) Main bearing cap bolts

Use the following procedure in order to install the main bearing cap bolts:

1. Apply clean engine oil to the threads of the main bearing cap bolts.
2. Put the main bearing caps in the correct position that is indicated by a number on the top of the main bearing cap. Install the main bearing caps with the locating tabs in correct alignment with the recess in the cylinder block.
3. Evenly tighten the main bearing cap bolts.

   Torque for the main bearing cap bolts. ..... 80 N·m (59 lb ft)

4. After torquing the bolts for the main bearing caps, the bolts must be rotated for an additional 90 degrees.

Note: Ensure that the crankshaft can rotate freely.

i04129189

Crankshaft

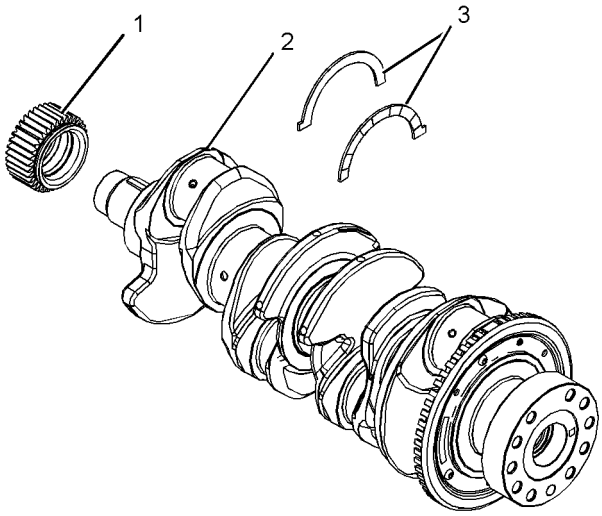

g02155393

Illustration 64

Typical example

(1) Crankshaft gear
(2) Crankshaft
(3) Crankshaft thrust washers

Maximum permissible temperature of the gear for installation on the crankshaft ..... 180 °C (356 °F)

Maximum permissible temperature of the drive gear for the balancer (if equipped) for installation on the crankshaft ..... 180 °C (356 °F)

Note: Refer to Disassembly and Assembly for the correct procedure to remove and install the drive gear for the balancer.

The end play of a new crankshaft ..... 0.1 to 0.41 mm (0.00394 to 0.01614 inch)

Standard thickness of thrust washer .. 2.69 to 2.75 mm (0.10591 to 0.10827 inch)

Oversize thickness of thrust washer ... 2.89 to 2.95 mm (0.11378 to 0.11614 inch)

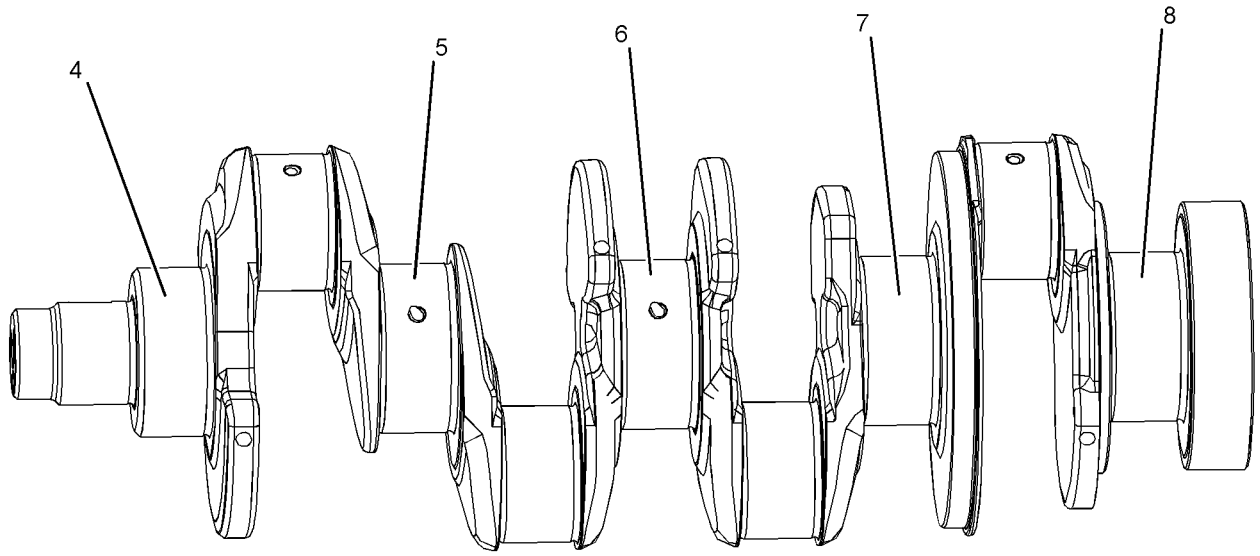

g02155394

Illustration 65

Typical example

(4) Journal 1
(5) Journal 2
(6) Journal 3
(7) Journal 4
(8) Journal 5

Refer to table 7 for the run out of the crankshaft journals.

Table 7

Journal	Run out of the Journals
(1)	Mounting
(2)	0.08 mm (0.0031 inch)
(3)	0.15 mm (0.0059 inch)
(4)	0.08 mm (0.0031 inch)
(5)	Mounting

Inspect the crankshaft for wear or for damage. For more information regarding the servicing of the crankshaft, contact the Global Technical Support Center.

Refer to Specifications, “Connecting Rod Bearing Journal” for more information on the connecting rod bearing journals and connecting rod bearings.

Refer to Specifications, “Main Bearing Journal” for information on the main bearing journals and for information on the main bearings.

i02934550

Crankshaft Seals

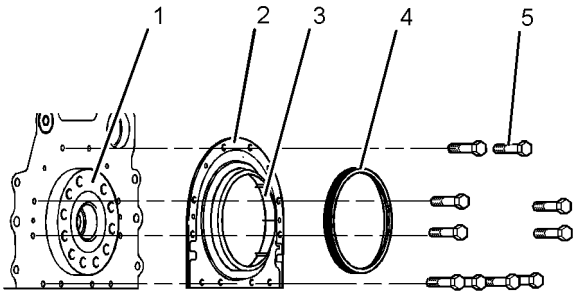

Illustration 66 g01455434

Typical example

(1) Crankshaft

(2) Crankshaft seal

(3) Plastic sleeve

(4) Alignment tool

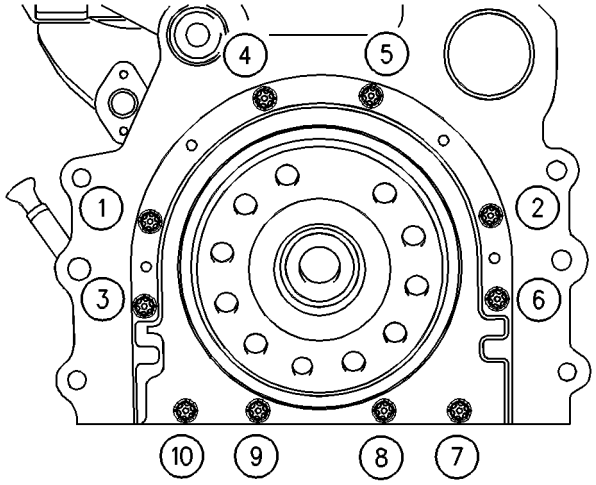

Illustration 67 g00915076

(5) Tighten bolts 1, 2, 3, 4, 5, 6, 7, and 10 in the sequence that is shown in Illustration 67 to the following torque. ..... 22 N·m (16 lb ft)

Remove the alignment tool.

Tighten bolts 8 and 9 in the sequence that is shown in Illustration 67 to the following torque. ..... 22 N·m (16 lb ft)

i03996317

Connecting Rod Bearing Journal

The original size of the connecting rod bearing journal on the crankshaft ..... 67.99 to 68.01 mm (2.67677 to 2.67755 inch)

Maximum permissible wear of a bearing journal on the crankshaft when a new connecting rod is installed ..... 0.04 mm (0.0016 inch)

Width of the connecting rod bearing journals on the crankshaft ..... 40.305 to 40.455 mm (1.58681 to 1.59271 inch)

Surface finish of connecting rod bearing journals ..... Ra 0.25 microns

i03996318

Main Bearing Journal

The original size of the main bearing journal ..... 83.980 to 84.000 mm (3.30629 to 3.30708 inch)

Maximum permissible wear of the main bearing journals ..... 0.040 mm (0.0016 inch)

Surface finish of bearing journals and crank pins ..... Ra 0.25 microns

Width of new main bearing journal where the thrust washer is installed ..... 39.765 to 39.835 mm (1.56555 to 1.56830 inch)

Width of new main bearing journal where the thrust washer is not installed ..... 39.19 to 39.39 mm (1.54291 to 1.55078 inch)

The shell for the main bearings

The shells for the main bearings are available for remachined journals which have the following oversize dimensions.

Oversize bearing shell ..... 0.25 mm (0.010 inch)
Oversize bearing shell ..... 0.50 mm (0.020 inch)
Oversize bearing shell ..... 0.76 mm (0.030 inch)

Thickness at center of the shells of oversize bearing shell 0.25 mm (0.010 inch) ..... 2.226 to 2.232 mm (0.08764 to 0.08787 inch)

Thickness at center of the shells of oversize bearing shell 0.50 mm (0.020 inch) ..... 2.353 to 2.359 mm (0.09264 to 0.09287 inch)

Thickness at center of the shells of oversize bearing shell 0.76 mm (0.030 inch) ..... 2.480 to 2.486 mm (0.09764 to 0.09787 inch)

Width of the main bearing shells .. 26.32 to 26.58 mm (1.03622 to 1.04645 inch)

Clearance between the bearing shell and the main bearing journals ..... 0.036 to 0.094 mm (0.00142 to 0.00370 inch)

i04285130

Connecting Rod

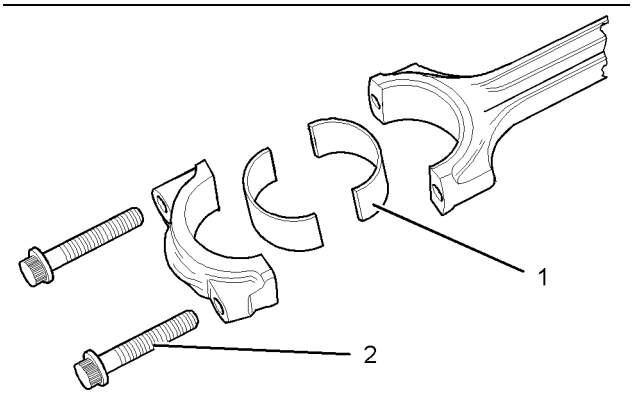

g01254512

Illustration 68
Typical example

(1) The bearing shell for the connecting rod

For the correct procedure to install the bearing shell for the connecting rod, refer to Disassembly and Assembly, “Pistons and Connecting Rods - Assemble”.

Table 8

Thickness of Connecting Rod Bearing at the Center	1.995 to 2.002 mm (0.07854 to 0.07882 inch)
Bearing Clearance	0.031 to 0.038 mm (0.00122 to 0.00150 inch)

Table 9

Oversize Connecting Rod Bearing
0.25 mm (0.010 inch)
0.51 mm (0.020 inch)
0.76 mm (0.030 inch)

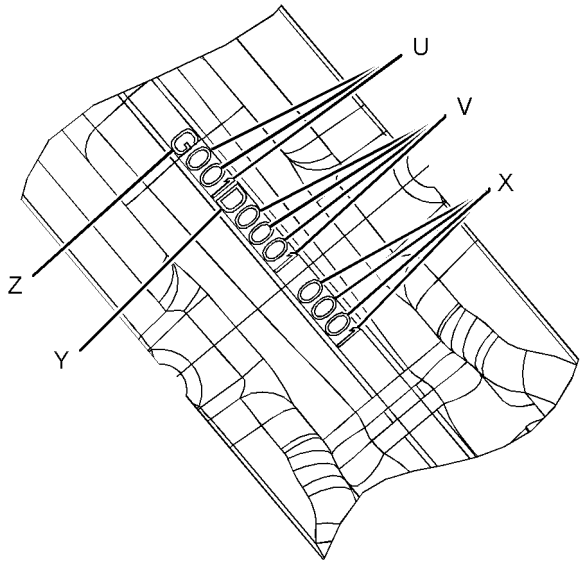

Illustration 69 g01950657

Typical example

(U) Day code
(V) Code for the connecting rod
(X) Code for the Connecting rod cap
(Y) Year code
(Z) Code for the grade of connecting rod

Note: The day code is from the first day in the year. For example, “001” will be the first day of the appropriate year.

The mating surfaces of the connecting rod are produced by hydraulically fracturing the forged connecting rod. Ensure that the correct cap for the connecting rod is installed with the correct connecting rod. Ensure that the serial numbers for both components match.

(2) Torque of the setscrews for the connecting rod ..... 40 N·m (30 lb ft)

Tighten the setscrews for the connecting rod for an additional 120 degrees. The setscrews for the connecting rod (2) must be replaced after this procedure.

Note: Always tighten the connecting rod cap to the connecting rod, when the assembly is out of the engine. Tighten the assembly to the following torque 20 N·m (14 lb ft).

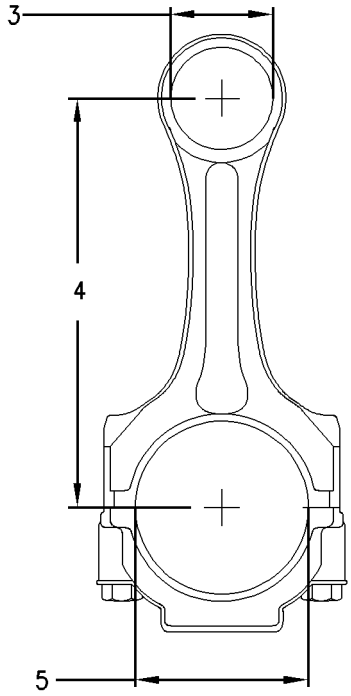

Illustration 70 g01254518

Typical example

(3) Diameter of the finished bore for the piston pin ..... 39.738 to 39.723 mm (1.5645 to 1.5639 inch)

(4) Distance between the parent bores ..... 219.05 to 219.1 mm (8.6240 to 8.6260 inch)

(5) Diameter for the finished bore for the connecting rod bearing ..... 72.045 to 72.058 mm (2.83641 to 2.83692 inch)

The connecting rod is color coded. The color code is a reference for the length of the connecting rod. Refer to table 10 for the length of connecting rod.

Table 10

Specifications for the Connecting Rod		
Grade Letter	**Color Code**	**Length Of The Connecting Rod**
B	Blue	163.081 to 163.114 mm (6.42050 to 6.42180 inch)

i04041471

Piston and Rings

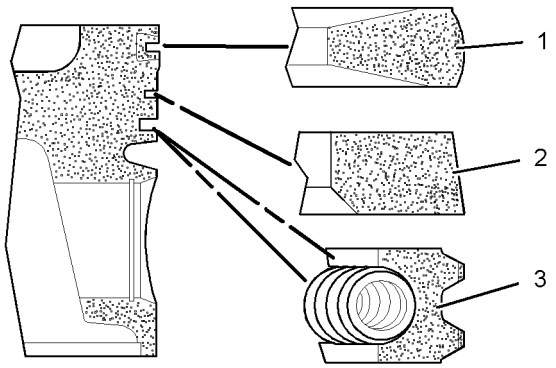

g01155119

Illustration 71

Typical example

(1) Top compression ring

The shape of the top compression ring ..... Keystone

Ring gap ..... 0.30 to 0.40 mm (0.01181 to 0.01575 inch)

Note: When you install a new top compression ring, make sure that the word “TOP” is facing the top of the piston. New top piston rings have a black identification mark. The identification mark must be on the left of the ring end gap when the top piston ring is installed on an upright piston.

(2) Intermediate compression ring

The shape of the intermediate compression ring ..... Internal bevel in the bottom edge with a tapered face

Width of intermediate compression ring .... 2.47 to 2.495 mm (0.0972 to 0.0982 inch)

The clearance between a new intermediate compression ring and the piston groove in a new piston ..... 0.065 to 0.110 mm (0.00256 to 0.00433 inch)

Ring gap ..... 0.65 to 0.85 mm (0.0256 to 0.0335 inch)

Note: When you install a new intermediate compression ring, make sure that the word “TOP” is facing the top of the piston. New intermediate rings have a blue identification mark. The identification mark must be on the left of the ring end gap when the top piston ring is installed on an upright piston.

(3) The oil control ring

Width of oil control ring ..... 2.97 to 2.99 mm (0.1169 to 0.1177 inch)

The clearance between a new oil control ring and the groove in a new piston ..... 0.03 to 0.07 mm (0.0011 to 0.0027 inch)

Ring gap ..... 0.30 to 0.55 mm (0.0118 to 0.0216 inch)

Note: When you install a new oil control ring, make sure that the word “TOP” is facing the top of the piston. New oil control rings have a red identification mark. The identification mark must be on the left of the ring end gap when the top piston ring is installed on an upright piston. The oil control ring is a two-piece ring that is spring loaded. A pin is used in order to hold both ends of the spring of the oil control ring in position. The ends of the spring of the oil control ring must be installed opposite the end gap of the oil control ring.

Note: Ensure that the ring end gaps of the piston rings are spaced 120 degrees from each other.

Piston

Note: An arrow which is marked on the piston crown must be toward the front of the engine.

Piston height above cylinder block .. 0.55 to 0.20 mm (0.02165 to 0.00787 inch)

Width of top groove in the piston ..... Tapered

Width of second groove in new piston ..... 2.56 to 2.58 mm (0.1008 to 0.1016 inch)

Width of third groove in new piston .. 3.02 to 3.04 mm (0.1189 to 0.1197 inch)

Piston pin

Diameter of a new piston pin ..... 39.694 to 39.700 mm (1.5628 to 1.5630 inch)

i02696381

Piston Cooling Jet

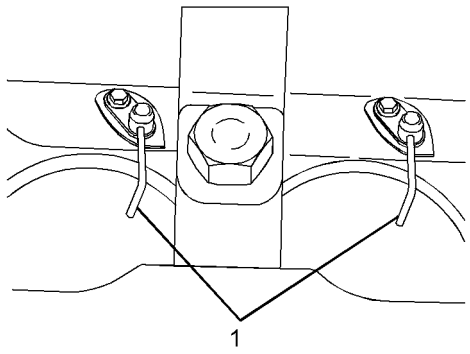

Illustration 72 g01352576

(1) Installed piston cooling jets

The valve must move freely. Tighten the bolt to the following torque. ..... 9 N·m (7 lb ft)

Piston Cooling Jet Alignment

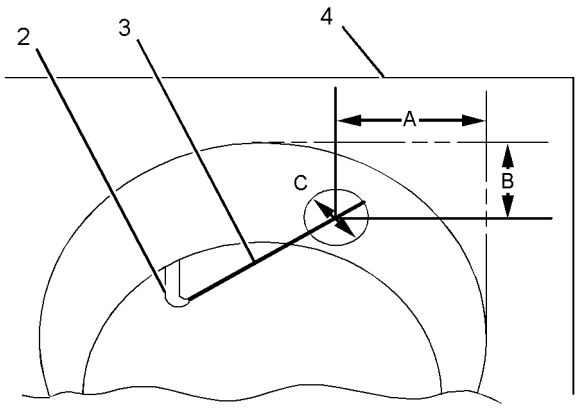

Illustration 73 g01352578

(2) Piston cooling jet
(3) Rod
(4) Cylinder block

Use the following procedure in order to check the alignment of the piston cooling jet.

1. Insert rod (3) into the end of the piston cooling jet (2). Rod (3) has a diameter of 1.70 mm (0.067 inch). Rod (3) must protrude out of the top of the cylinder block.
2. Dimension (A) is 50.75 mm (1.9980 inch) and dimension (B) is 9.35 mm (0.3681 inch). Dimension (A) and dimension (B) are tangential to the cylinder bore (4).
3. The position of the rod (3) must be within dimension (C). Dimension (C) is 14 mm (0.5512 inch).

Note: Ensure that the rod (3) can not damage the piston cooling jet when the alignment is checked. The piston cooling jets can not be adjusted. If a piston cooling jet is not in alignment the piston cooling jet must be replaced.

i04313812

Balancer Group

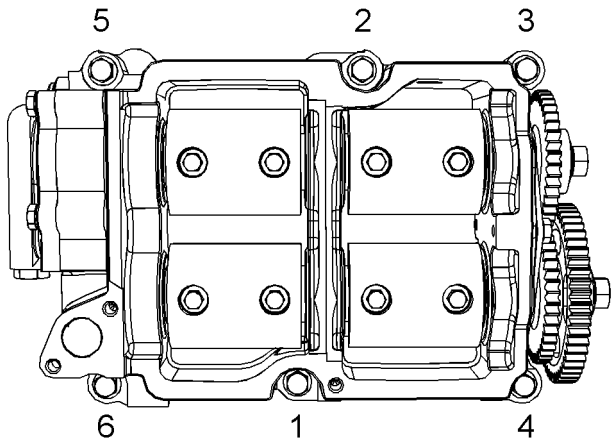

Illustration 74 g02150753

Typical example

Tighten the bolts in the sequence that is shown in illustration 74 to the following torque. ..... 54 N·m (40 lb ft)

Backlash values

Backlash between crankshaft ring gear and the balancer intermediate gear ... 0.020 to 0.240 mm (0.0008 to 0.009 inch)

Backlash between the balancer shaft gears ..... 0.020 to 0.160 mm (0.0008 to 0.0063 inch)

i03907005

Accessory Drive (SAE “B”)

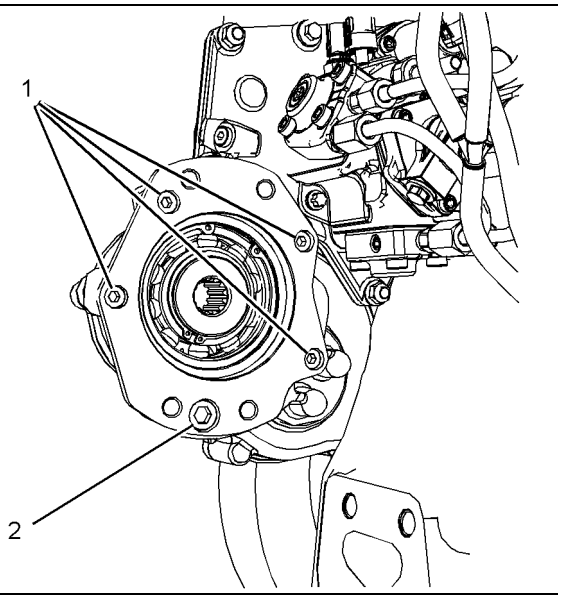

Illustration 75 g02148374

Typical example

(1) Tighten allen head screws to the following torque. ..... 22 N·m (16 lb ft)

(2) Tighten the allen head screw to the following torque. ..... 78 N·m (58 lb ft)

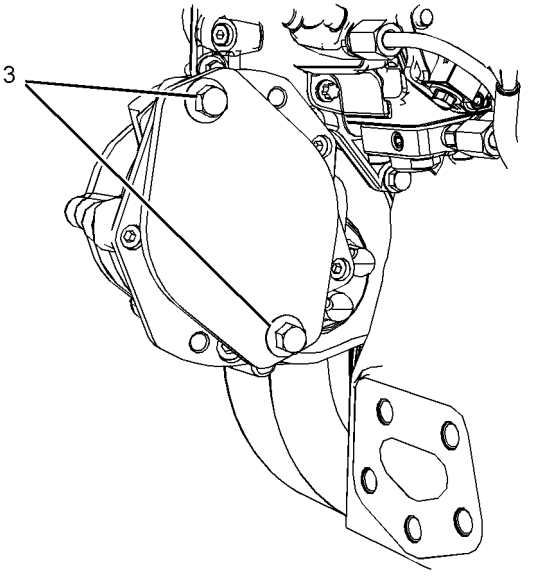

Illustration 76 g02148375

Typical example

(3) Tighten bolts to the following torque. ..... 44 N·m (33 lb ft)

i03907004

Accessory Drive

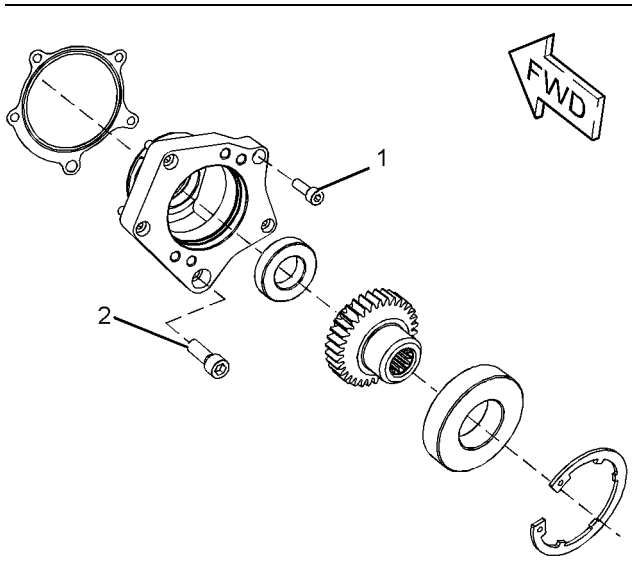

Illustration 77 g02148372

Typical example

(1) Tighten the allen head screws to the following torque. ..... 22 N·m (16 lb ft)

(2) Tighten the allen head screws to the following torque. ..... 78 N·m (58 lb ft)

i03917090

Front Housing and Covers

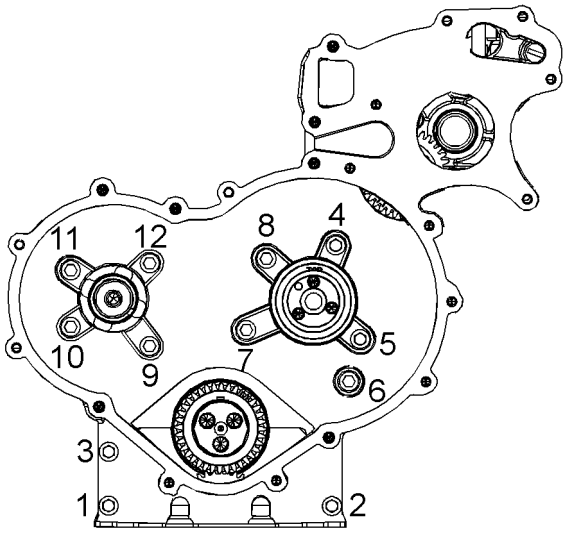

g01860874

Illustration 78

Typical example

Tighten the setscrew to the sequence that is shown in illustration 78 to the following torque. ..... 28 N·m (20 lb ft)

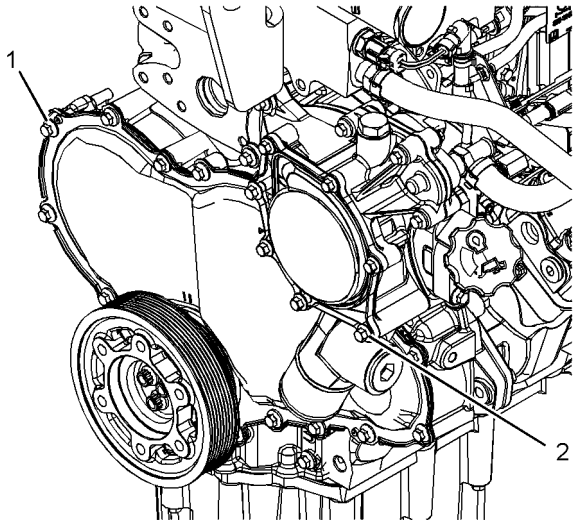

g02150954

Illustration 79

Typical example

(1) Tighten the bolts that fasten the front cover to the front housing to the following torque. ..... 22 N·m (16 lb ft)

(2) Tighten the bolts that fasten the water pump to the front housing to the following torque. ..... 22 N·m (16 lb ft)

Note: Refer to Specifications, “Water Pump” for the correct bolt tightening sequence for the water pump.

i04351939

Gear Group (Front)

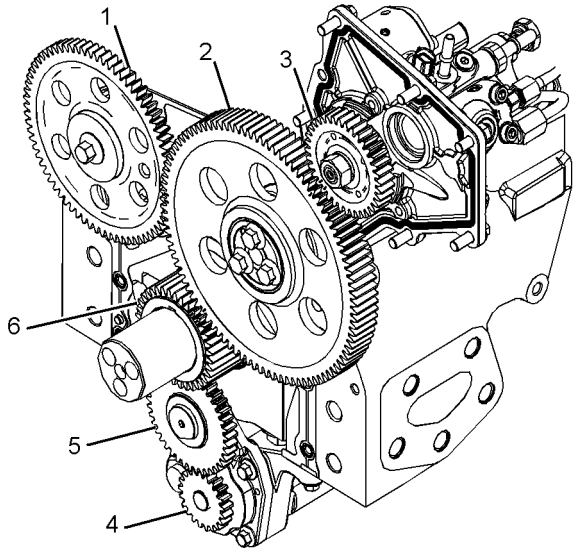

g01857156

Illustration 80

Gear train

(1) Camshaft gear

Torque for the 8.8 graded bolt for the camshaft gear ..... 95 N·m (70 lb ft)
Torque for the 10.9 graded bolt for the camshaft gear ..... 120 N·m (89 lb ft)

Number of teeth 72

(2) Idler gear and hub

Torque for the bolts for the idler gear ..... 44 N·m (33 lb ft)

Width of light duty idler gear and bearing assembly ..... 19.95 to 20.05 mm (0.78543 to 0.78937 inch)
Width of medium duty and heavy duty idler gear and bearing assembly ..... 25.45 to 25.55 mm (1.00197 to 1.00590 inch)

Inside diameter of light duty idler gear bearings ..... 60.022 to 60.052 mm (2.36307 to 2.36425 inch)

Inside diameter of medium duty and heavy duty idler gear bearings ..... 56.00 to 56.03 mm (2.20472 to 2.20590 inch)

Outside diameter of light duty idler gear hub ..... 59.95 to 59.97 mm (2.36023 to 2.36102 inch)

Outside diameter of medium duty and heavy duty idler gear hub ..... 55.95 to 55.97 mm (2.20275 to 2.20354 inch)

Clearance of light duty idler gear bearing on hub ..... 0.052 to 0.102 mm (0.00205 to 0.00402 inch)

Clearance of medium duty and heavy duty idler gear bearing on hub ..... 0.03 to 0.08 mm (0.00118 to 0.00315 inch)

The end play of the light duty idler gear ..... 0.05 to 0.25 mm (0.00197 to 0.00984 inch)

The end play of the medium duty and heavy duty idler gear ..... 0.05 to 0.15 mm (0.00197 to 0.00591 inch)

Number of teeth 97

(3) Fuel injection pump drive gear

Torque for the nut ..... 64 N·m (47 lb ft)

Number of teeth 36

(4) Oil pump gear

The number of teeth on the oil pump gear 21

Backlash values

Backlash between the oil pump idler gear (5) and the oil pump drive gear (4) ..... 0.05 to 0.15 mm (0.0020 to 0.0059 inch)

Backlash between the oil pump idler gear (5) and the crankshaft gear (6) ..... 0.025 to 0.160 mm (0.00098 to 0.00630 inch)

Backlash between the idler gear (2) and the crankshaft gear (6) ..... 0.05 to 0.15 mm (0.0020 to 0.0059 inch)

Backlash between the camshaft gear (1) and the idler gear (2) ..... 0.05 to 0.15 mm (0.0020 to 0.0059 inch)

Backlash between the fuel injection pump gear (3) and the idler gear (2) ..... 0.05 to 0.15 mm (0.0020 to 0.0059 inch)

Backlash between the water pump gear (not shown) and the fuel injection pump gear (3) ..... 0.05 to 0.15 mm (0.0020 to 0.0059 inch)

Backlash between the power take-off drive (if equipped) and the idler gear (2) ..... 0.05 to 0.250 mm (0.0020 to 0.0098 inch)

(5) Oil pump idler gear

Inside diameter of oil pump idler gear bearing ..... 16.012 to 16.038 mm (0.6304 to 0.6314 inch)

Outside diameter of oil pump idler gear shaft ..... 15.966 to 15.984 mm (0.6286 to 0.6293 inch)

Clearance of oil pump idler gear bearing on shaft ..... 0.028 to 0.072 mm (0.0011 to 0.0028 inch)

End play of the oil pump idler gear ..... 0.050 to 0.275 mm (0.0019 to 0.0108 inch)

End play of the oil pump drive gear ..... 0.005 to 0.090 mm (0.00020 to 0.00354 inch)

(6) Crankshaft gear

Bore diameter of crankshaft gear ..... 51.00 to 51.03 mm (2.0079 to 2.0091 inch)

Outside diameter of crankshaft hub ..... 51.021 to 51.002 mm (2.0087 to 2.0079 inch)

Clearance of gear on crankshaft ..... −0.021 to +0.028 mm (−0.00083 to 0.00110 inch)

Number of teeth 36

i03520340

Flywheel

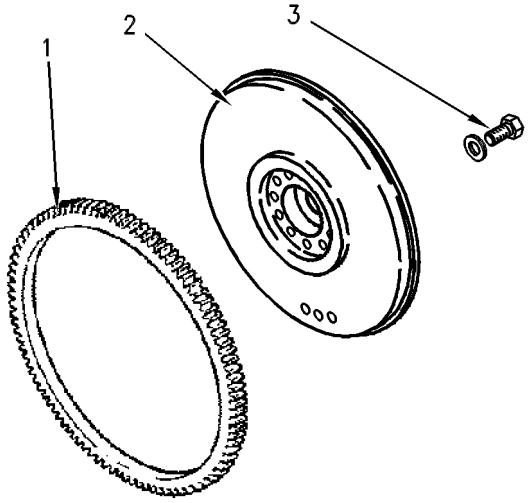

Illustration 81 g00584712

Typical example

(1) Flywheel ring gear

Heat the flywheel ring gear to the following temperature. ..... 250 °C (480 °F)

Note: Do not use an oxyacetylene torch to heat the flywheel ring gear.

(2) Flywheel

(3) Bolt

Tighten the flywheel bolts to the following torque. ..... 140 N·m (103 lb ft)

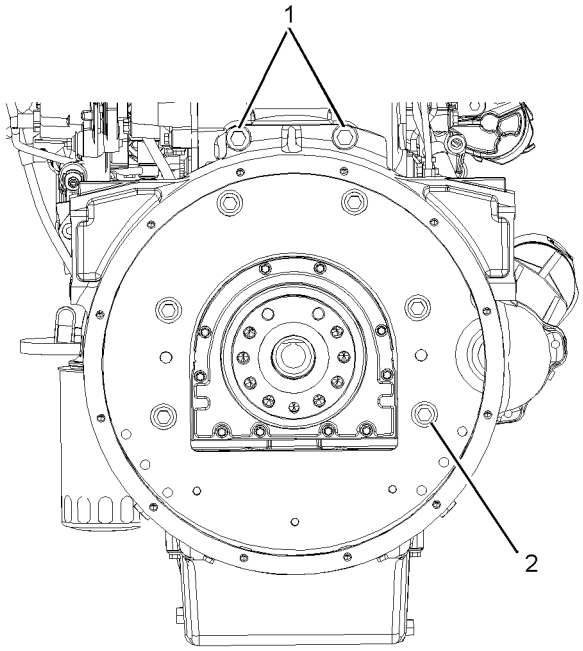

Illustration 82 g01254486

Typical example

Setscrew

(1) Tighten the setscrew to the following torque. ..... 75 N·m (55 lb ft)

Setscrew

(2) Tighten the setscrew to the following torque. ..... 63 N·m (46 lb ft)

Note: If 12.9 setscrews are installed, apply Tooling (A) to the setscrews. Tighten the 12.9 setscrews to a torque of 70 N·m (52 lb ft).

i04315754

Flywheel Housing

Table 11

Required Tools			
Tool	**Part Number**	**Part Description**	**Qty**
A	-	Loctite 575	1

i03934631

Crankshaft Pulley

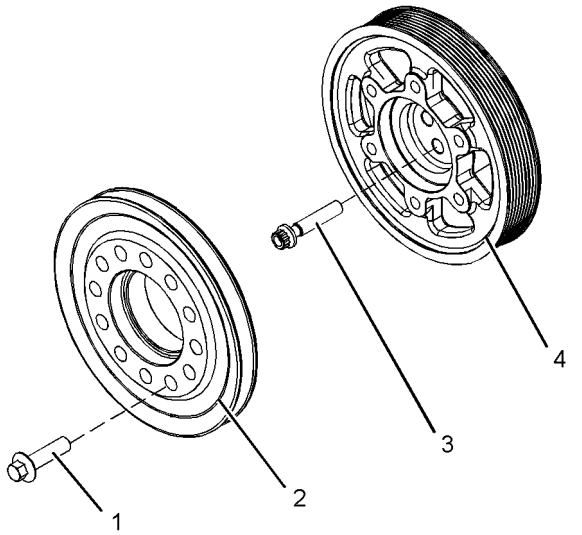

g02155003

Illustration 83
Typical example

(1) Tighten the bolts to the following torque. .. 78 N·m (58 lb ft)

(3) Tighten the bolts to the following torque. ..... 22.5 N·m (17 lb ft)

Note: Tighten the bolts (3) must be tightened through an angle of 120 degrees.

(2) Auxiliary pulley

(4) Crankshaft pulley

i04083729

Belt Tensioner

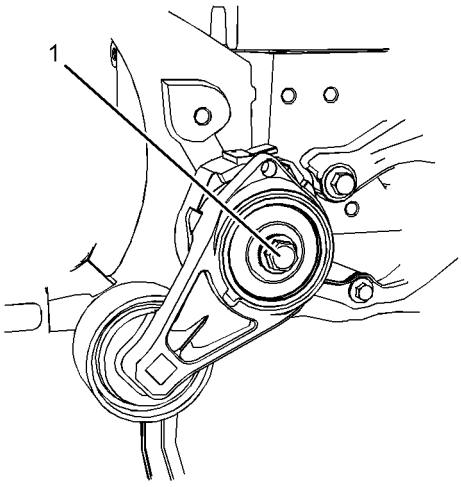

g02291813

Illustration 84
Typical example

(1) Tighten the bolt to the following torque. ... 45 N·m (33 lb ft)

Note: To install the belt tensioner, refer to Disassembly and Assembly, “Belt Tensioner - Remove and Install” for the correct procedure.

i03629003

Refrigerant Compressor

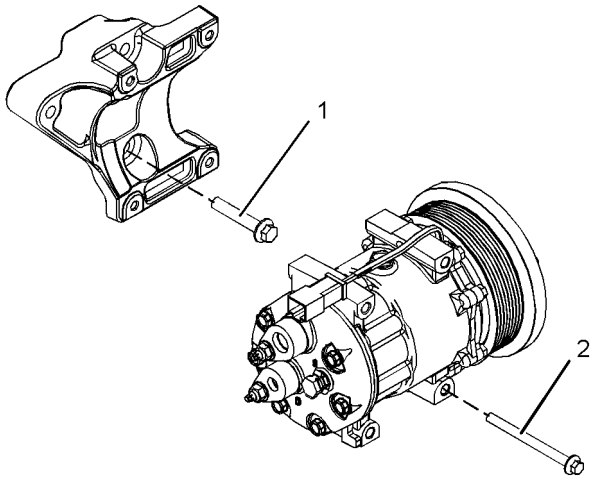

g01946810

Illustration 85

Typical example

(1) Tighten the bolts to the following torque. .. 44 N·m (32 lb ft)

(2) Tighten the bolts to the following torque. .. 22 N·m (16 lb ft)

i04089710

Fan Drive

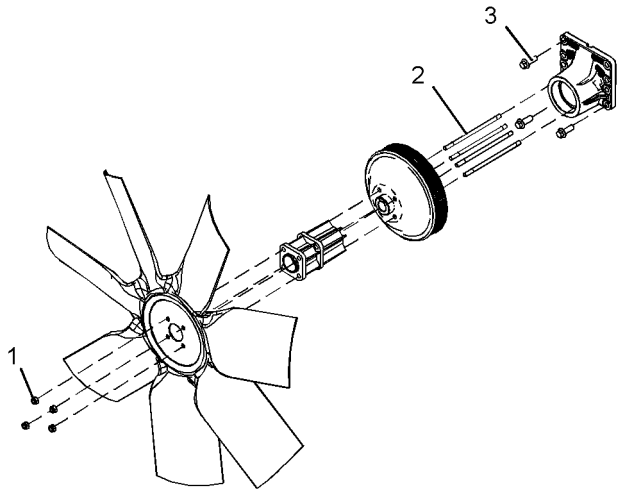

g02297293

Illustration 86

Typical example

(1) Tighten the locking nuts to the following torque. ..... 22 N·m (16 lb ft)

(2) Tighten the studs (if equipped) to the following torque. ..... 11 N·m (97 lb in)

(3) Tighten the bolts to the following torque. .. 44 N·m (32 lb ft)

i03520381

Engine Lifting Bracket

All engines are equipped engine lifting brackets. Some lifting brackets require two bolts and some lifting brackets may require four bolts.

Tighten the bolts on the engine lifting brackets to the following torque. ..... 44 N·m (32 lb ft)

i03917270

Alternator

The 12 V and 24 V Type 1 Alternators

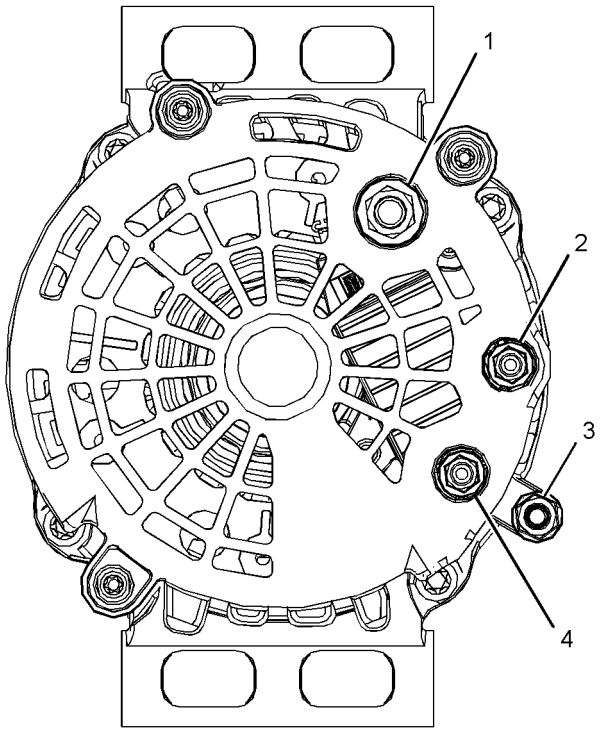

Illustration 87 g02149533

Typical example

(1) Terminal “B+”

Tighten the nut on the terminal to the following. ..... 7.5 N·m (66 lb in)

(2) Terminal “D+”

Tighten the nut on the terminal to the following torque. ..... 2.2 N·m (19 lb in)

(3) Terminal “B-” (if equipped)

Tighten the nut on the terminal to the following torque. ..... 7 N·m (62 lb in)

(4) Terminal “W”

Tighten the nut on the terminal to the following torque. ..... 2.2 N·m (19 lb in)

Tighten the nut for the alternator pulley to the following torque. ..... 95 N·m (70 lb ft)

Output

The outputs of the alternators ..... 55 Amp, 80 Amp, 100 Amp, 120 Amp or 150 Amp

Alternator Bracket

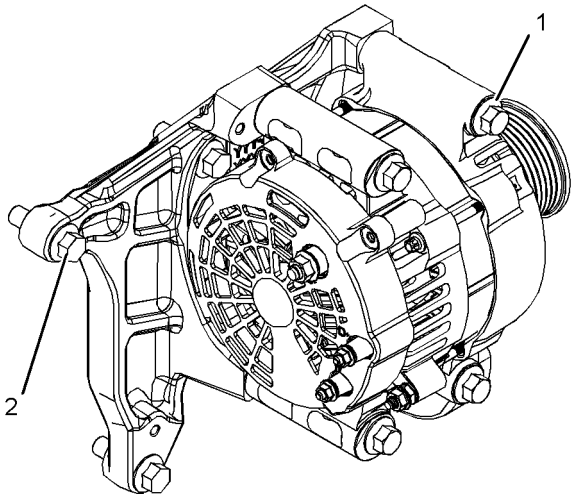

Illustration 88 g02151927

Typical example

(1) Tighten the setscrews that secure the alternator to the bracket to the following torque. ..... 50 N·m (37 lb ft)

(2) Tighten the setscrews that secure the bracket to the cylinder block to the following torque. ..... 44 N·m (32 lb ft)

i04458352

Starter Motor

24 V Starting Motor 5.5 kW

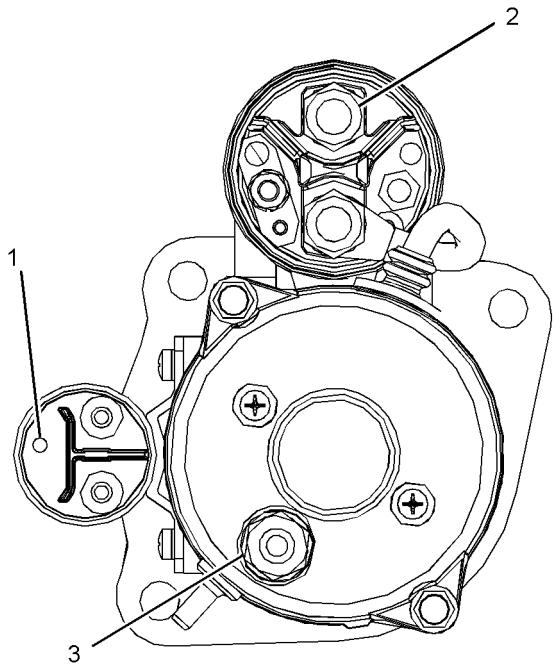

Illustration 89 g02643800

Typical example

(1) Tighten the solenoid terminal to the following torque. ..... 2.5 N·m (22 lb in)

(2) Tighten the positive terminal nut to the following torque. ..... 15 N·m (11 lb ft)

(3) Tighten the negative terminal nut to the following torque. ..... 18 N·m (13 lb ft)

Rated voltage ..... 24 V

12 V Starting Motor 3 kW, 4 kW, and 24 V Starting Motor 4.5 kW

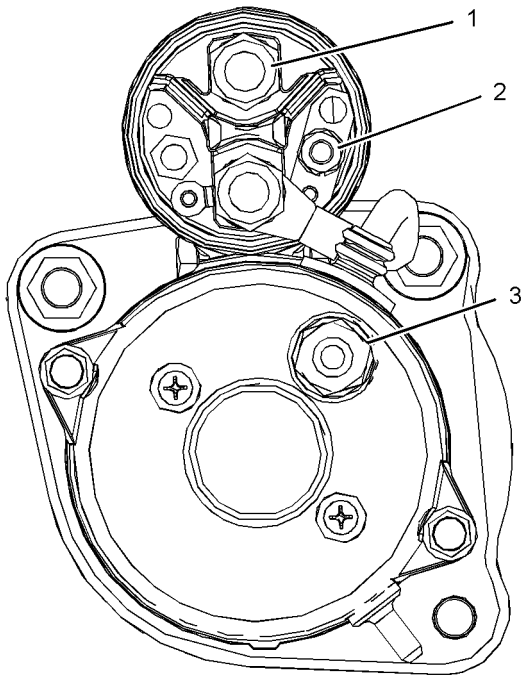

Illustration 90 g01943502

Typical example

(1) Tighten the positive terminal nut to the following torque. ..... 15 N·m (11 lb ft)

(2) Tighten the solenoid terminal to the following torque. ..... 5.8 N·m (51 lb in)

(3) Tighten the negative terminal nut to the following torque. ..... 18 N·m (13 lb ft)

Rated voltage ..... 12 V

i04067589

Coolant Temperature Sensor

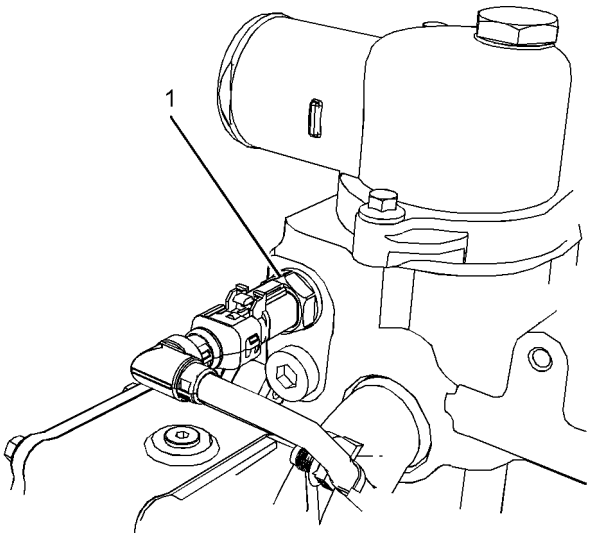

g02285594

Illustration 91
Typical example

(1) Sensor

Torque for the sensor ..... 20 N·m (15 lb ft)

i03916100

Engine Oil Pressure Sensor

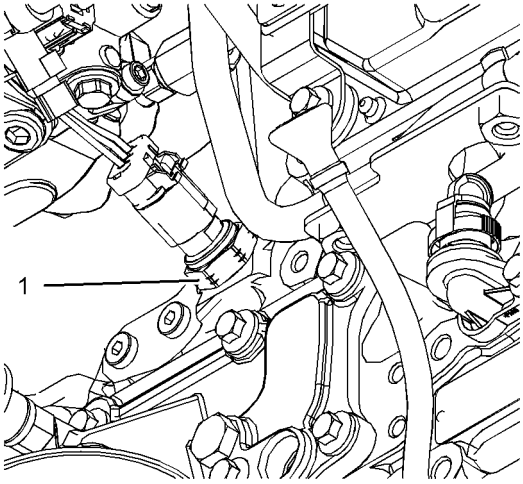

g02150747

Illustration 92
Typical example

(1) Sensor

Tighten the sensor. Torque for the sensor ..... 10 N·m (89 lb in)

i03916119

Boost Pressure Sensor

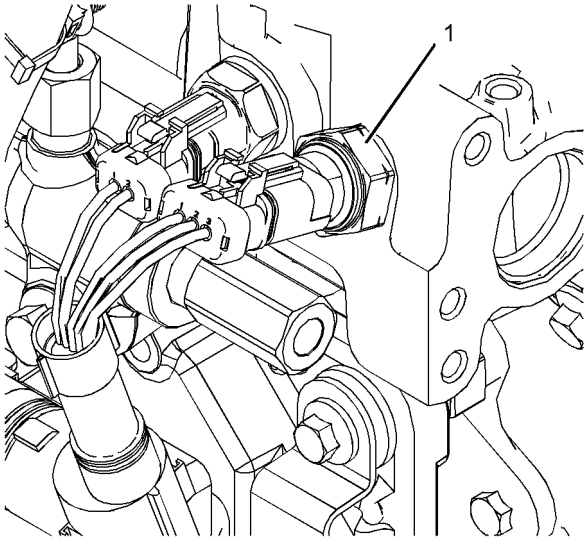

g02150750

Illustration 93

Typical example

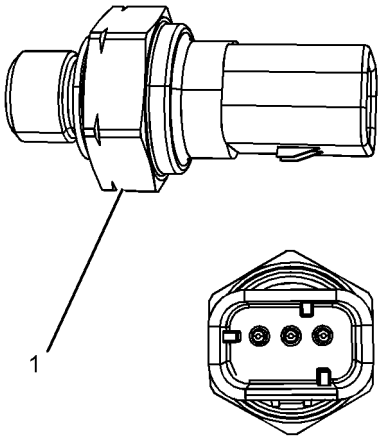

g01332534

Illustration 94

Typical example

(1) Tighten the sensor to the following torque. ..... 10 N·m (89 lb in)

i04285191

Atmospheric Pressure Sensor

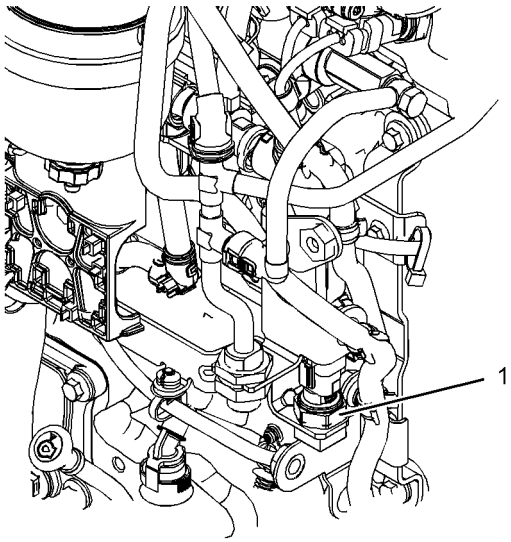

g02452158

Illustration 95

Typical example

(1) Tighten the atmospheric pressure sensor to the following torque. ..... 10 N·m (89 lb in)

i03916112

Inlet Manifold Temperature Sensor

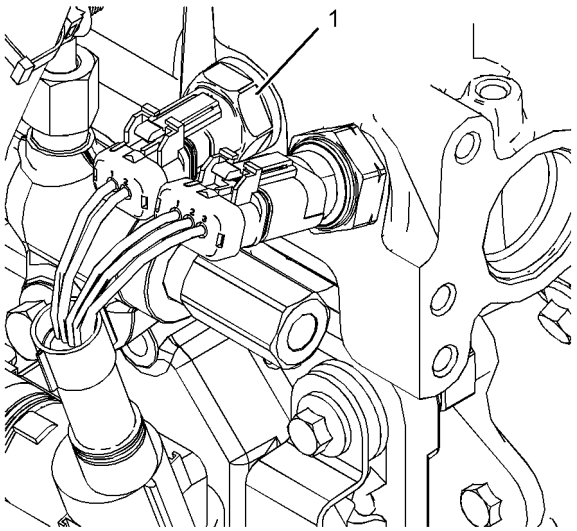

Illustration 96 g02150749

Typical example

(1) Tighten the sensor to the following torque. ..... 20 N·m (15 lb ft)

i04229390

Temperature Sensor (DPF Inlet)

Table 12

Required Tools			
Tool	**Part Number**	**Part Description**	**Qty**
A	-	Bostik Pure Nickel Anti-Seize Compound	1

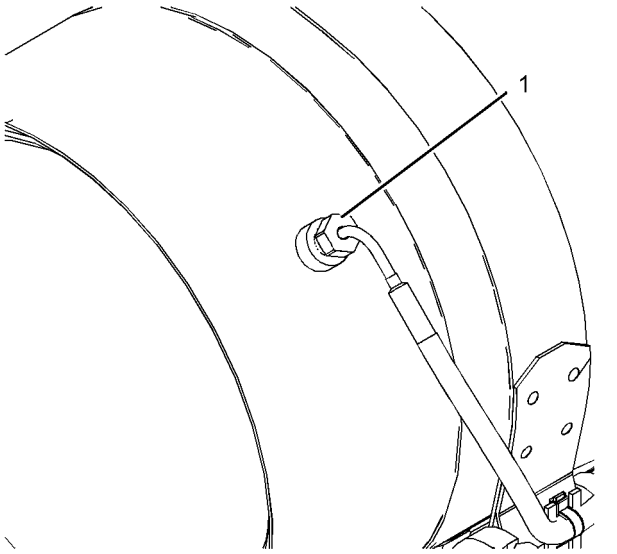

Illustration 97 g02154926

Typical example

Note: Use tooling (A) in order to lubricate the thread of temperature sensor (1).

(1) Tighten the temperature sensors to the following torque. ..... 45 N·m (33 lb ft)

i03996416

Pressure Sensor (NOx Reduction System)

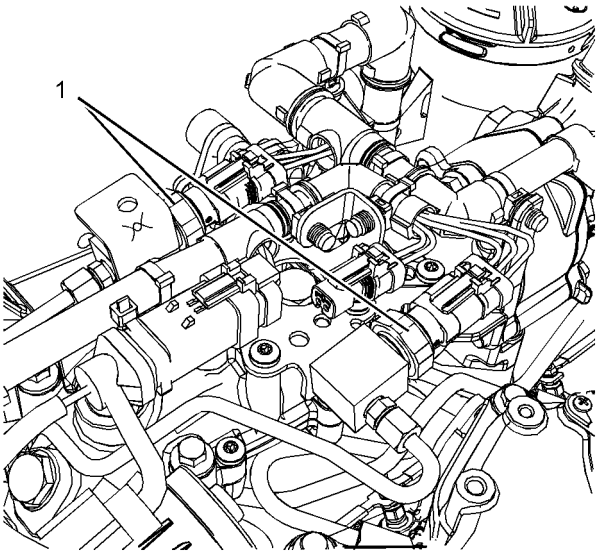

Illustration 98 g02174143

Typical example

(1) Tighten the pressure sensors to the following torque. ..... 10 N·m (89 lb in)

i04285190

Temperature Sensor (NOx Reduction System)

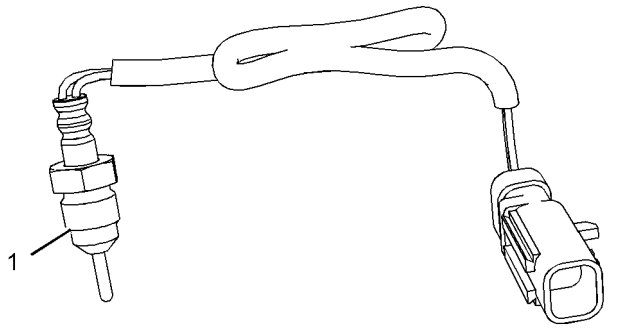

Illustration 99 g02452136
Typical example

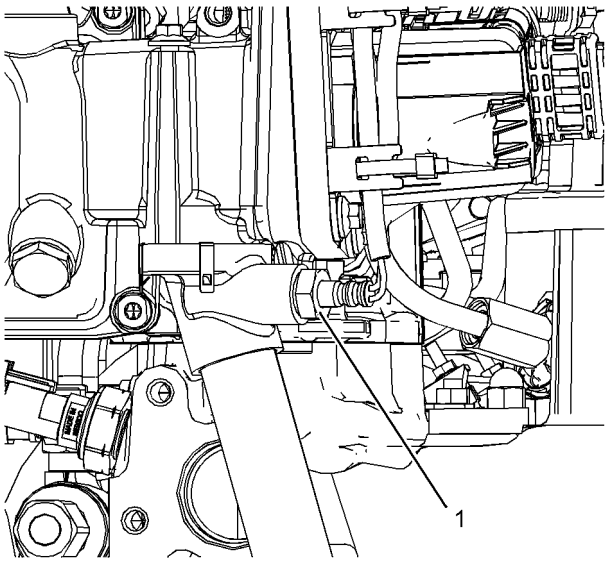

Illustration 100 g02152917
Typical example

(1) Tighten the sensor to the following torque. ..... 30 N·m (22 lb ft)

Operating voltage ..... 5 VDC

i04285189

Speed/Timing Sensor

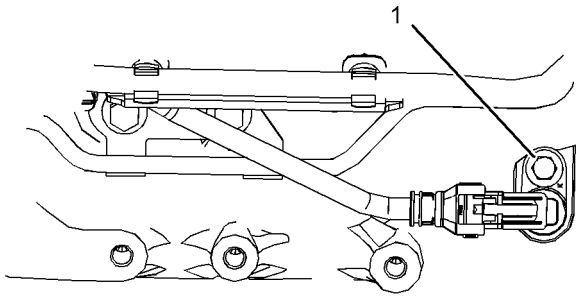

Illustration 101 g01854256
Typical example

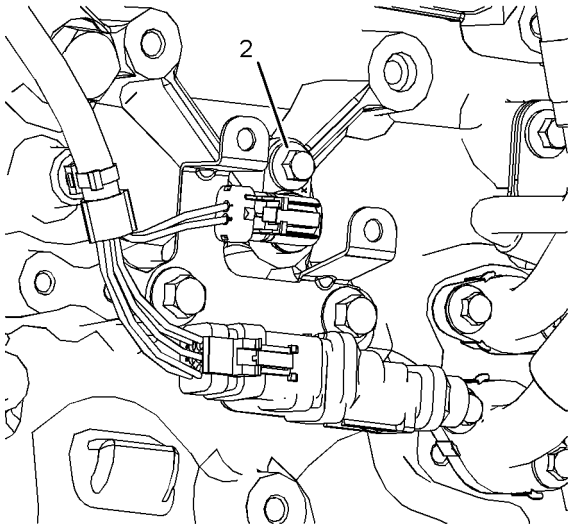

Illustration 102 g02150748
Typical example

(1) Tighten the bolt for the crankshaft position sensor to the following torque. ..... 14 N·m (10 lb ft)

(2) Tighten the bolt for the camshaft position sensor to the following torque. ..... 14 N·m (10 lb ft)

i04285193

Electronic Control Module

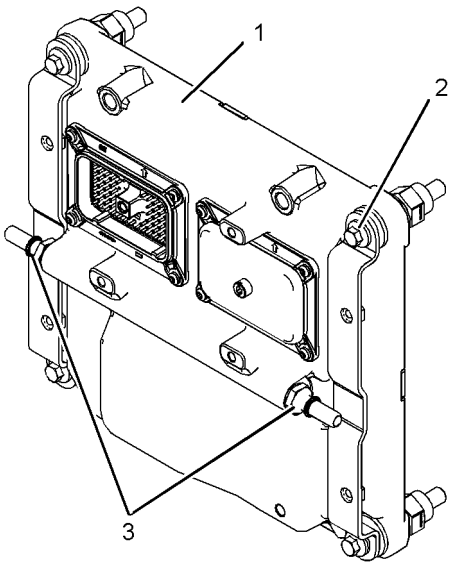

g02465316

Illustration 103

Typical example

(1) Electronic control module (ECM)
(3) Fuel line connectors

(2) Bolt

Tighten the four bolts for the ECM. Torque for the bolts ..... 22 N·m (16 lb ft)

i03918469

Glow Plugs

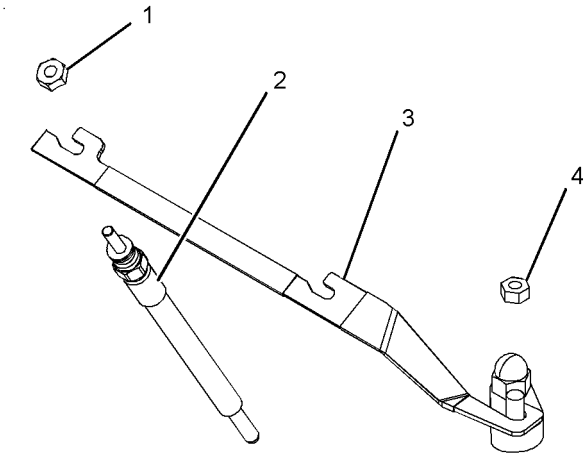

g01861335

Illustration 104

Typical example

Tighten the glow plugs (2) in the cylinder head to the following torque. ..... 15 N·m (11 lb ft)

Tighten the nuts (1) for the bus bar (3) that is installed on top of the glow plugs to the following torque. ..... 2 N·m (18 lb in)

Tighten the nut (4) for the isolator for the bus bar to the following torque. ..... 6 N·m (53 lb in)

Voltage ..... 12 V or 24 V

i03907009

Air Compressor (Twin Cylinder Compressor)

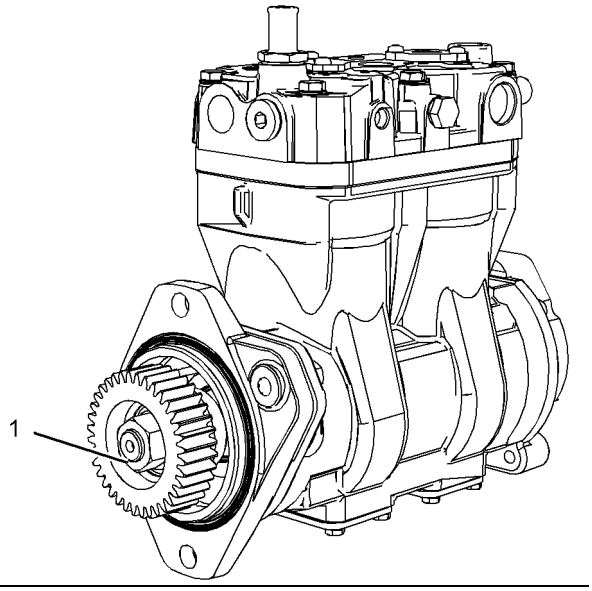

Illustration 105 g02148379
Typical example

(1) Tighten the nut to the following torque. .. 120 N·m (89 lb ft)

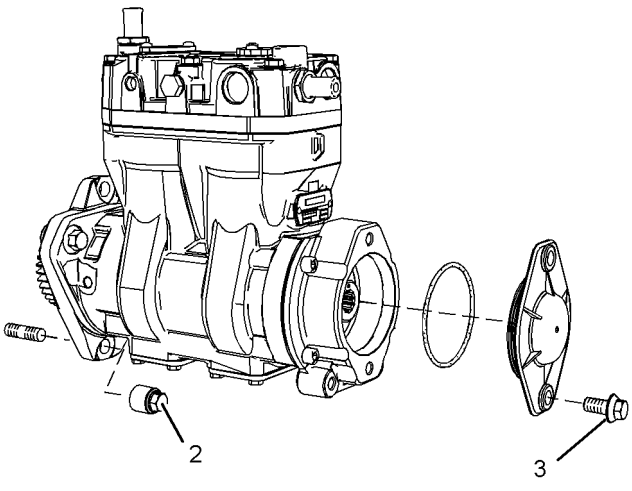

Illustration 106 g02148380
Typical example

(2) Tighten the nuts to the following torque. .. 78 N·m (58 lb ft)

(3) Tighten the bolts to the following torque. .. 16 N·m (12 lb ft)

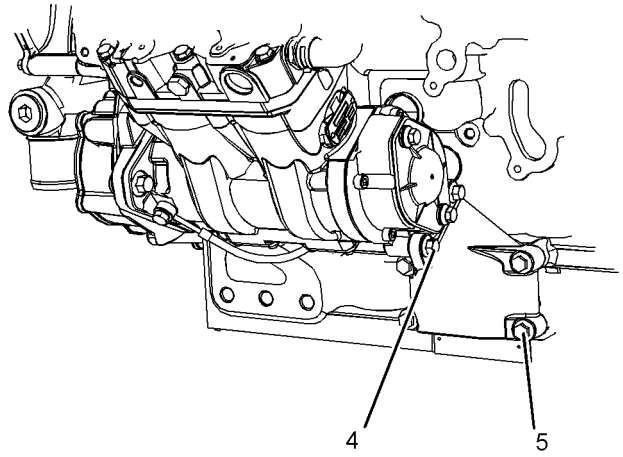

Illustration 107 g02148381
Typical example

(4) Tighten the bolts to the following torque. .. 22 N·m (16 lb ft)

(5) Tighten the bolts to the following torque. .. 44 N·m (32 lb ft)

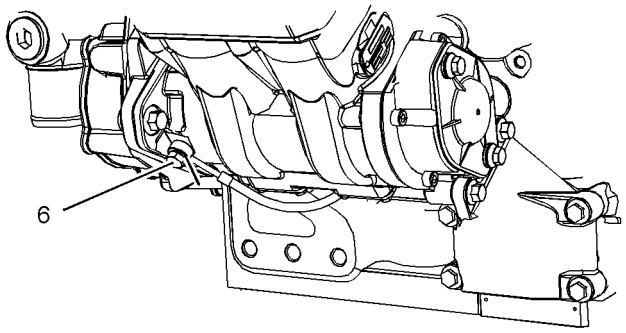

Illustration 108 g02148408
Typical example

(6) Tighten the banjo bolt to the following torque. ..... 9 N·m (80 lb in)

For the correct procedure to install the air compressor, refer to Disassembly and Assembly, “Air Compressor - Remove and Install - Twin Cylinder Compressor”.

i03907068

Air Compressor (Single Cylinder)

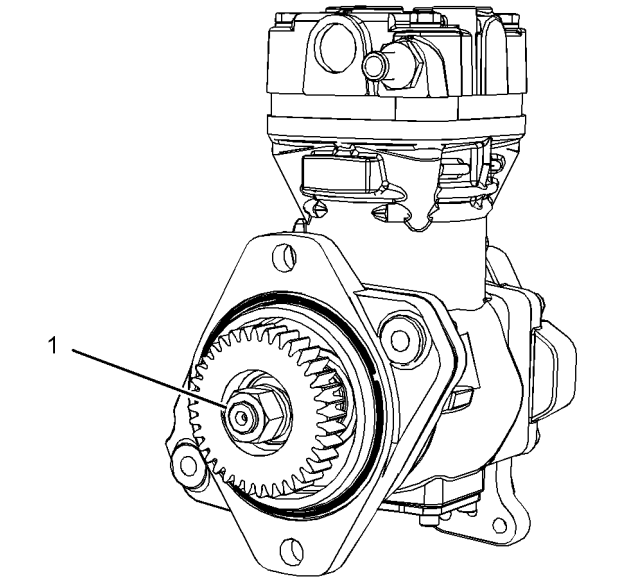

Illustration 109 g02148439
Typical example

(1) Tighten the nut to the following torque. .. 120 N·m (89 lb ft)

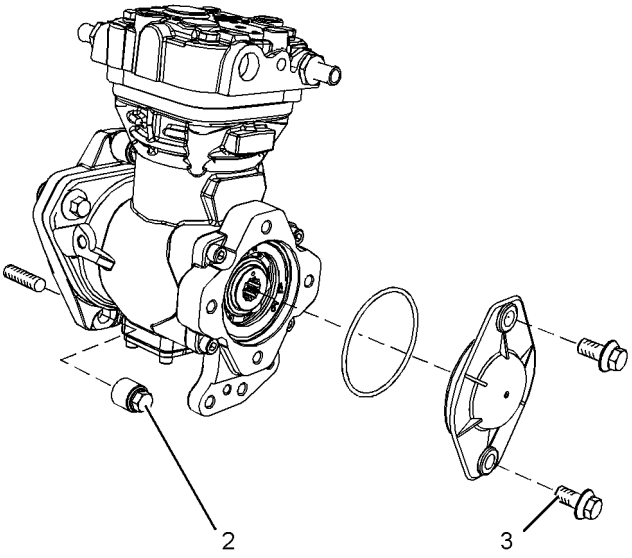

Illustration 110 g02148442
Typical example

(2) Tighten the nuts to the following torque. .. 78 N·m (58 lb ft)

(3) Tighten the bolts to the following torque. .. 13 N·m (115 lb in)

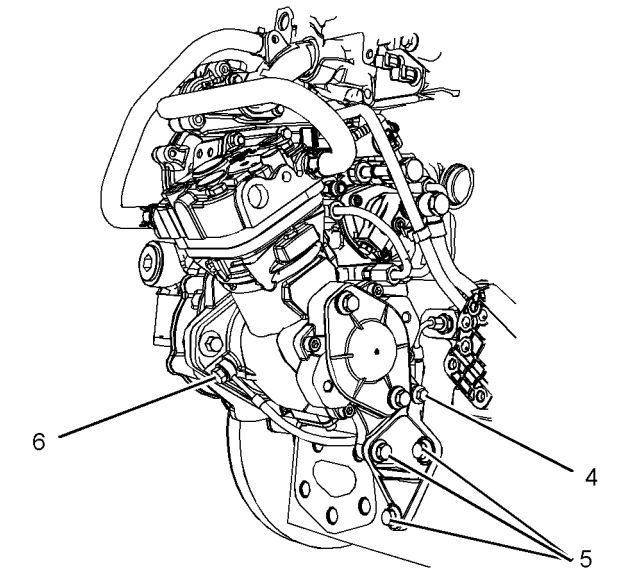

Illustration 111 g02148447
Typical example

(4) Tighten the bolts to the following torque. .. 22 N·m (16 lb ft)

(5) Tighten the bolts to the following torque. .. 44 N·m (32 lb ft)

(6) Tighten the banjo bolt to the following torque. ..... 9 N·m (80 lb in)

For the correct procedure to install the air compressor, refer to Disassembly and Assembly, “Air Compressor - Remove and Install - Single Cylinder”.

Index

A

Accessory Drive 36
Accessory Drive (SAE “B”) 36
Air Compressor (Single Cylinder) 50
Air Compressor (Twin Cylinder Compressor) 49
Alternator 42
  Alternator Bracket 42
  The 12 V and 24 V Type 1 Alternators 42
Atmospheric Pressure Sensor 45

B

Balancer Group 35
Belt Tensioner 40
Boost Pressure Sensor 45

C

Camshaft 23
Camshaft Bearings 24
Connecting Rod 32
Connecting Rod Bearing Journal 31
Coolant Temperature Sensor 44
Crankcase Breather 27
Crankshaft 29
Crankshaft Pulley 40
Crankshaft Seals 31
Cylinder Block 29
Cylinder Head 12
Cylinder Head Valves 11

D

Diesel Particulate Filter 22

E

Electronic Control Module 48
Engine Design 4
Engine Lifting Bracket 41
Engine Oil Cooler 25
Engine Oil Filter Base 24
Engine Oil Pan 26
  Front sealant 26
  Rear sealant 26
Engine Oil Pressure 26
Engine Oil Pressure Sensor 44
Engine Oil Pump 25
Exhaust Cooler (NRS) 19
Exhaust Gas Valve (NRS) 17
Exhaust Manifold 21
Exhaust Sensor and Lines (NRS) 18

F

Fan Drive 41
Flexible Exhaust Pipe 22
Flywheel 39
Flywheel Housing 39
Front Housing and Covers 37
Fuel Filter Base (Primary Fuel Filter Base) 8
Fuel Filter Base (Single Secondary Fuel Filter Base) 7
Fuel Filter Base (Twin Secondary Fuel Filter Base) 7
Fuel Injection Lines 4
Fuel Injection Pump 5
Fuel Injectors 6
Fuel Manifold (Rail) 8
Fuel Transfer Pump 6

G

Gear Group (Front) 37
Glow Plugs 48

I

Important Safety Information 2
Inlet Manifold Temperature Sensor 46

L

Lifter Group 9

M

Main Bearing Journal 32
  The shell for the main bearings 32

P

Piston and Rings 34
  Piston 34
Piston Cooling Jet 35
  Piston Cooling Jet Alignment 35
Pressure Sensor (NOx Reduction System) 46

R

Refrigerant Compressor 41
Rocker Shaft 9

S

Specifications Section 4

Speed/Timing Sensor 47
Starter Motor..... 43
12 V Starting Motor 3 kW, 4 kW, and 24 V Starting Motor 4.5 kW..... 43
24 V Starting Motor 5.5 kW..... 43

T

Table of Contents..... 3
Temperature Sensor (DPF Inlet)..... 46
Temperature Sensor (NOx Reduction System) 47
Turbocharger (Series Turbochargers) 13
Turbocharger (Single Turbocharger) 15

V

Valve Mechanism Cover..... 10

W

Water Pump..... 28
Water Temperature Regulator and Housing 28

©2011 Perkins Engines Company Limited
All Rights Reserved

Printed in U.K.